INDIAN INSTITUTE OF MANAGEMENT INDORE

Prabandh Shikhar, Rau-Pithampur Road, Indore-453556 (M.P.), India

NIT / IIMI/Project/01/2015/13
(File No.:IIMI/Project/270/15)

TENDER DOCUMENT

VOLUME – I

TECHNO COMMERCIAL PROPOSAL:(Envelope–I)

Name of work:

"Construction, Supply & Installation of Modular Furniture/Fixture in Faculty Residence, Visiting Faculty Residence & IPM Hostels at IIM Indore"

BID ISSUE DATE	**February 6, 2015**
FORM OF TENDER	**Item Rate Tender**
LAST DATE OF BID SUBMISSION	**February 20, 2015 upto 2.00 P.M.**
DATE OF TECHNICAL BID OPENING	**February 20, 2015 at 3.30 P.M.**

INDEX

Sl. No./ Volume	Contents	Page No.	
		From	To
Detailed Notice Inviting Tender (NIT)		3	4
Volume-I-Technical Bid		6	133
Volume-I-A			
1	Invitation to bid	7	8
2	Form of tender & contract data	8	10
3	Instruction to bidders	10	27
3.A	Introduction	10	19
3.B	Bidding Document	19	21
3.C	Preparation of Bids	21	22
3.D	Submission of Bids	22	23
3.E	Technical & Financial Bid Opening and Evaluation	23	26
3.F	Award of Contract	26	27
Volume-I-B			
4	Qualification criteria and evaluation procedure	28	31
5	Qualification data sheets	31	40
Volume-I-C			
6	General conditions of contract	41	92
7	Special conditions of contract	93	99
8	Model Rules for the protection of Health & Sanitary arrangements for workers employed by contractors	100	105
9	Proforma of Integrity Pact	106	107
10	Proforma of Integrity Agreement	108	112
11	Safety Codes	113	118
12	Contractor's Labour Regulations	119	124
13	Proforma of Performance Guarantee	125	126
14	Proforma of Schedules	127	130
15	Proforma of Agreement	131	133
Volume-II-Tender Drawings & Specifications		134	154
Volume-III-Financial Bid		155	158

Indian Institute of Management Indore

Detailed Notice Inviting Tenders

NIT/IIMI/Project/01/2015/13(File No.:IIMI/Project/270/15)

The Chief Engineer, IIM Indore on behalf of the Director, IIM Indore invites sealed tender from reputed & eligible contractors fulfilling the pre-qualification criteria enumerated below for the following work and will be received at the office of "**The Chief Engineer, Indian Institute of Management Indore, Prabandh Shikhar, Rau – Pithampur Road, Indore 453556 (M.P.)" up to 02.00 P.M. on February 20, 2015.** Envelope 1 will be opened at 3:30 PM on the same day.

The tender shall be submitted in 2 different envelopes:

Envelope No. 1: Envelope 1 should consists of two sealed envelope in which one should have EMD & Tender Processing Feeand other should contain Pre-qualification document and techno commercial details.

Envelope No. 2: Financial bid in the BoQ schedule.

Name of Work	Amount of Estimate (in Rs)	Amount of Earnest Money Deposit (In Rs.)	Tender Processing Fee (In Rs.)	Time Allowed for Completion
Construction, Supply & Installation of Furniture/Fixture in Faculty Residence, Visiting Faculty Residence & IPM Hostels at IIM Indore	220.358 Lacs	4.41 Lacs	1000	60 Days

The Tender Processing Feed and Earnest Money Deposit (EMD) shall be payable in the form of Banker's cheque / Demand Draft / Fixed Deposit Receipt (FDR) of any Nationalized or Scheduled Commercial Bank issued in the favour of 'Indian Institute of Management, Indore' payable at Indore.

Pre-qualification documents containing EMD & Tender Processing Fee and eligibility criteria/ Techno commercial bid envelopes will be opened on February 20, 2015 at 3.30 PM.

Eligibility Criteria for the tenderers:

The Tenderers should:

- Fulfill the minimum eligibility criteria enlisted in Clause 3.12.1 of the Volume I
- Fulfill the qualification criteria mentioned under Clause 3.14 of the Volume-I
- Possess the eligible plant/ equipment/ machineries as is enlisted in Clause 3.13.4 of the Volume-I

Note: Tender document can be downloaded from official website of IIM Indore under URL: http://www.iimidr.ac.in/iimi/index.php/tenders OR from http://eprocure.gov.in/epublish/app.. The bid along with the Demand draft for EMD and Tender Fee (Non Refundable) shall be submitted by the bidder in the form of Banker's cheque / Demand Draft / Fixed Deposit Receipt (FDR) of any Nationalized or Scheduled Commercial Bank issued in favor of 'Indian Institute of Management, Indore' payable at Indore through Dak or hand delivery so as to reach to the Chief Engineer, IIM Indore, on or before February 20, 2015 up-to 02:00P.M.

TENDER DOCUMENTS

VOLUME- I	**TECHNICAL BID**
VOLUME- II	**TENDER SPECIFICATIONS**
	TENDER DRAWINGS
VOLUME- III	**FINANCIAL BID**

VOLUME-I

TECHNICAL BID

FOR

Construction, Supply & Installation of Furniture/Fixture in Faculty Residence, Visiting Faculty Residence & IPM Hostels at IIM Indore.

Sl. No.	Contents
Volume-I-A	
1	Invitation to bid
2	Form of tender & contract data
3	Instruction to bidders
3.A	Introduction
3.B	Bidding Document
3.C	Preparation of Bids
3.D	Submission of Bids
3.E	Technical & Financial Bid Opening and Evaluation
3.F	Award of Contract
Volume-I-B	
4	Qualification criteria and evaluation procedure
5	Qualification data sheets
Volume-I-C	
6	General conditions of contract
7	Special conditions of contract

VOLUME I – A

CONTENTS

1.0 INVITATION TO BID
2.0 FORM OF TENDER & CONTRACT DATA
3.0 INSTRUCTIONS TO BIDDERS

1.0 INVITATION TO BID

Sub: Invitation to bid for Construction, Supply & Installation of Furniture/Fixture in Faculty Residence, Visiting Faculty Residence & IPM Hostels at IIM Indore.

Dear Madam(s)/ Sir(s),

Bids are invited from Contractors or firms having experience of minimum 3 years in handling such type of works.

The scope of work includes Execution of works, Management and Supervision at the site, including supply of requisites as well as furnishing & allied services etc. The basic drawings for the proposed work is attached herewith in Volume-I C and the Contractor who will be assigned this work shall have to develop this in consultation with the Engineer in charge of IIM Indore appointed by the Competent Authority.

Details of scope and broad specifications are given in Volume I.

1.1 Tender document can be downloaded from February 6, 2015 to February 20, 2015 Up to 02:00 P.M. from the official website of IIM Indore under URL: http://www.iimidr.ac.in/iimi/index.php/tenders OR from http://eprocure.gov.in/epublish/app.. The Banker's cheque / Demand Draft / Fixed Deposit Receipt (FDR) for EMD of Rs. 4.41 Lacs and tender fee of Rs. 1000/- (Non Refundable) shall be submitted along with the bid. This submission is mandatory, accordingly offer of those shall be opened whose EMD and tender fees is received.

Bidder has to submit the Entire technical Bid in hard copy which includes the Pre-qualification documents mandatory to qualify in separate envelop on or before the submission date and time.

1.2 In case the bidders need any further information about the tender or want to visit the site they are requested to put up the request on or before February 9, 2015 till 05.00 P.M to the Chief Engineer, IIM Indore for its clarification. No query shall be entertained after the same.

1.3 Bids invited are as per two-envelope system. Firms / Bidders are requested to submit technical and financial bid in two separate sealed envelope simultaneously, one containing the Technical Proposal along with the EMD & Tender fee and the other containing the Price Proposal. Both Envelopes are then put up in a Big single envelope, which should be sealed & submitted.

1.4 Short listing will be made on the basis of statement of qualification and

experience in handling similar nature and size of work as per Pre-qualification requirements.

1.5 Qualification requirements specifying financial capacity, technical, minimum acceptable levels with regards to Bidders experience in relevant work and other related factors such as work on hand, other commitments on that time frame and litigation history as given and described will be evaluated first and those qualification criteria will be considered for further evaluation. Technical Proposal, which is not considered substantially responsive, will be rejected. The short listed bidders' Price bids shall be opened on subsequent date for further evaluation in the presence of the Bidders who choose to attend the opening.

1.6 The employer shall not be responsible for any costs or expenses incurred by the bidders in connection with the preparation and delivery of bids, including costs and expenses related to visits to the sites etc.

1.7 Technical Proposal not containing the EMD and Tender fee will be out-rightly rejected.

1.8 Technical Bids will be opened in the presence of bidder's representatives who choose to attend, at Project Office, IIM Indore 3.30 P.M. on February 20, 2015 for further short listing and there after the bidder's will be conveyed about the schedule of Financial bids opening.

1.9 All Bidders participating as a Limited Company, Firm or a Joint Venture will have to attach a valid Power of Attorney in the name of the person who signs the bid. Bidders will also nominate and authorize the person/s who will attend various meetings such as opening of Technical and Financial Bids. Persons other than such nominated and authorized persons shall not be permitted to attend and participating tender events. For joint ventures and consortiums a legal document of Memorandum of Understanding shall be attached. In case of Joint Venture all the partners jointly & severally responsible for the work.

2.0 FORM OF TENDER & CONTRACT DATA

2.1 Philosophy

The tender is item rate tender. The Tender process is aimed at selecting suitable vendor only. The work will be awarded to a responsive bidder whom the Evaluation Committee finds suitable after elaborate screening process.

2.2 CONTRACT DATA

Important contract data is summarized as under;

2.2.1	Name of work	Construction, Supply & Installation of Furniture/Fixture in Faculty Residence, Visiting Faculty Residence & IPM Hostels at IIM Indore
2.2.2	Source of Funds	IIM Indore
2.2.3	Area / District Covered under the Bid	IIM Indore Campus, Indore
2.2.4	Type of work	Construction ,Supply & Installation of Modular Furniture / Fixture
2.2.5	Implementation Period	60 Days
2.2.6	Defect liability Period	One year
2.2.7	Communication for Site	Project Office, IIM Indore
2.2.8	Notification of Bid	February 6, 2015
2.2.9	Place of issue of documents	On-line from IIM Indore website http://www.iimidr.ac.in/iimi/index.php/tenders OR from http://eprocure.gov.in/epublish/app
2.2.10	Earnest Money Deposit	Rs. 4.41 Lacs only
2.2.11	Tender Processing Fee	Rs. 1000/- only.
2.2.12	Form of Securities	By Banker's cheque / Demand Draft / Fixed Deposit Receipt (FDR) Payable In favour of the IIM Indore
2.2.13	Bid Validity	Ninety days
2.2.14	Submission of Bid	Up to February 20, 2015 till 2.00 P.M.
2.2.15	Opening of the Technical Bids (Date & time)	February 20, 2015 at 3.30 P.M.
2.2.16	Place of Opening of Bids	Project Department, IIM Indore (M.P.)
2.2.17	Performance Guarantee	The successful tenderer, after award of work will be referred to as the contractor, shall deposit an amount equal to 5% of the tendered and accepted value of the work (without limit) as performance guarantee in one of the following forms: (i) Government securities. (ii) Fixed Deposit Receipt (FDR) of a Scheduled

		Bank. (iii) An irrevocable bank guarantee bond of any scheduled bank or the State Bank of India in the prescribed form given in Annexure. Within a period ranging of 10 days of issue of the letter of acceptance. This period can be further extended at the written request of the contractor by the Engineer-in-charge for a maximum period of 15 days with late fee @ 0.1% per day, of performance guarantee amount. The letter for commencement of work shall be issued to the contractor only after he/she submits the performance guarantee in an acceptable form.
2.2.18	Security Deposit	The security deposit shall be collected by deductions from the running bill of the contractors a sum @ 2.5% of the gross amount of the bill shall be deducted from each running bill as well as final bill of the contractor. Such deductions shall be made unless the contractor has deposited the amount of security at the rate mentioned in Government securities or Fixed Deposit Receipts. This is in addition to the performance guarantee that the contractor is required to deposit.

3.0 INSTRUCTION TO BIDDERS

CONTENTS:

A. INTRODUCTION

B. BIDDING DOCUMENTS

C. PREPARATION OF BIDS

D. SUBMISSION OF BIDS

E. TECHNICAL AND FINANCIAL BID OPENING AND EVALUATION

F. AWARD OF CONTRACT

A. INTRODUCTION

3.1. SOURCE OF FUNDS

Work will be funded by IIM Indore.

3.2. DESCRIPTION OF WORK:

Construction, Supply & Installation of Furniture/Fixture in Faculty Residence, Visiting Faculty Residence & IPM Hostels at IIM Indore

THE WORK COVERS:

Sl. No.	Description of Items
1	Providing and fixing in position requisite nos. of Dressing unit of size 1200X450X2000 MM as per the approved drawing made up of 18 mm thick Marine Plywood conforming to IS:710 both side laminated top ,bottom, side, shelf ,vertical , skirting , drawer facia ,drawer back , drawer side , back panel etc.. with 18 mm thick door and 9 mm thick both side laminated drawer bottom including necessary approved hinge, telescopic slide ,multipurpose lock , hanger rod ,96 mm handle , kd/minifix fitting, edges to be sealed with PVC edge bending tape 2.00 mm thick of approved brand and 5 mm full height mirror glass fixture and finishing etc.complete job. as per approved shade and colour and as per Architecture drawing and Engineer in Charge. .
2	Providing and fixing in position requisite nos. of WARDROBE unit of size 1600X600X2100 MM as per the approved drawing made up of 18 mm thick Marine Plywood conforming to IS:710 both side laminated top ,bottom, side, shelf ,vertical , skirting , drawer facia ,drawer back , drawer side etc.. with 18 mm thick door and 9 mm thick both side laminated drawer bottom and back panel including necessary approved hinge, telescopic slide ,multipurpose lock ,hanger rod of 25mm dia 16 gauge nickel plated MS Pipe ,2nos. tower bolt of barrel type having size 150 x 10mm, 4 nos. magnetic catcher triple strip vertical type of approved quality, 128 mm handle , kd/minifix fitting, edges to be sealed with PVC edge bending tape 2.00 mm thick of approved brand fixture and finishing etc.. complete job. as per approved shade and colour and as per Architecture drawing and Engineer in Charge. .
3	Providing and fixing in position requisite nos. of OVER HEAD unit on the wardrobe of size 1600X600X621 MM as per the approved drawing made up of 18 mm thick Marine Plywood conforming to IS:710 both side laminated top ,bottom, side,door and 9 mm thick both side laminated back panel including necessary approved hinge , 96 mm handle , kd/minifix fitting, edges to be sealed with PVC edge bending tape 2.00 mm thick of approved brand fixture and finishing etc.. complete job. as per approved shade and colour and as per Architecture drawing and Engineer in Charge. .
4	Providing and fixing in position requisite nos. of TV unit of size 1500X530X2100 MM as per the approved drawing made up of 18 mm thick Marine Plywood conforming to IS:710 (hallow type) both side laminated top ,bottom, side and 18 mm thick complate drawer unit and wall mounting back panel with shelf and 9 mm thick both side laminated drawer bottom and drawer unit back including necessary approved make telescopic slide , 96 mm handle , kd/minifix fitting, edges to be sealed with PVC edge bending tape 2.00 mm thick of approved brand fixture and finishing etc.. complete job. as per approved shade and colour and as per Architecture drawing and Engineer in Charge. .

5	Providing and fixing in position requisite nos. of Bed unit of size 1870X2150X900 MM along with under bed box unit of size 1830 X 1950 as per the approved drawing made up of 18 mm thick Marine Plywood conforming to IS:710 both side laminated all head board panel , foot board ,side panel , vertical panel with 18 mm thick cushion coverd door and 12 mm thick bottom panel and top panel including necessary approved hinge, hydraulic lifter suitable for this size of bed ,kd/minifix fitting, edges to be sealed with PVC edge bending tape 2.00 mm thick of approved brand fixture and finishing etc.. complete job. as per approved shade and colour and as per Architecture drawing and Engineer in Charge. .
6	Providing and fixing in position requisite nos. of Bed Side unit of size 450X450X450 MM as per the approved drawing made up of 18 mm thick Marine Plywood conforming to IS:710 both side laminated top ,bottom, side ,skirting , drawer facia ,drawer back , drawer side and 9 mm thick both side laminated drawer bottom and back panel including necessary telescopic slide , 96 mm handle , kd/minifix fitting, edges to be sealed with PVC edge bending tape 2.00 mm thick of approved brand fixture and finishing etc.. complete job. as per approved shade and colour and as per Architecture drawing and Engineer in Charge. .
7	Providing and fixing in position requisite nos. of SHOE RACK unit of size 600X400X900 MM as per the approved drawing made up of 18 mm thick Marine Plywood conforming to IS:710 both side laminated top ,bottom, side ,skirting ,door and 9 mm thick both side laminated back panel including necessary approved hinge , 96 mm handle , kd/minifix fitting, edges to be sealed with PVC edge bending tape 2.00 mm thick of approved brand fixture and finishing etc.. complete job. as per approved shade and colour and as per Architecture drawing and Engineer in Charge. .
8	Providing and fixing in position requisite nos. of Dining Table unit of size 1500X900X760 MM as per the approved drawing made up of Stainless Steel 202 grade 16 gauge pipe frame of sizes mentioned in the drawing & having 2mm thick 16 gauge base plate, black toughened glass 12mm thick Top Size 1500 x 900 MM, Chrome finish,materials conforming to relevant IS Standard including necessary fittings of approved brand fixture and finishing etc.complete job as per approved shade and colour and as per Architecture drawing and Engineer in Charge.
9	Providing and fixing in position requisite nos. of Dining table Chair without arms ergonomicaly designed for complete lumber support for Dining Table unit of size 450 X 533 X 1050 MM as per the approved drawing made up of Stainless Steel 202 grade 16 gauge square pipe frame of size 25 X 25 mm , seat & back assembly made up of 14mm hot pressed plywood die pressed, foam upholstery 25mm thick for seat with density 40kg/m3 and 25mm thick for back with density 32kg/m3 covered with 1mm thick Leatherrite tapestry, Chrome finish,materials conforming to relevant IS Standard including necessary fittings of approved brand fixture and finishing etc.complete job as per approved shade and colour and as per Architecture drawing and Engineer in Charge.

10	Providing and fixing in position requisite nos. of One Seater Sofa unit of size 865 (L) x 785 (D) x 730 (H) mm as per the approved drawing made up of Stainless Steel 202 grade 16 gauge 25.4 mm round pipe frame.Main frame made up of 15 x 30 x 1.6mm Stainless Steel 202 grade pipe and PVC Shoe is used in the bottom of the frame. seat & back assembly made up of 12mm commercial plywood having basic structure made up of wooden (marandi wood 100 x 100 mm battens), foam upholstery 150mm thick for seat with density 40kg/m3 and 70mm thick for back/side with density 32kg/m3 covered with 1mm thick Leatherrite tapestry, Chrome finish,materials conforming to relevant IS Standard including necessary fittings of approved brand fixture and finishing etc.complete job as per approved shade and colour and as per Architecture drawing and Engineer in Charge.
11	Providing and fixing in position requisite nos. of two Seater Sofa unit of size 1370 (L) x 785 (D) x 730 (H) mm as per the approved drawing made up of Stainless Steel 202 grade 16 gauge 25.4 mm round pipe frame.Main frame made up of 15 x 30 x 1.6mm Stainless Steel 202 grade pipe and PVC Shoe is used in the bottom of the frame. seat & back assembly made up of 12mm commercial plywood having basic structure made up of wooden (marandi wood 100 x 100 mm battens), foam upholstery 150mm thick for seat with density 40kg/m3 and 70mm thick for back/side with density 32kg/m3 covered with 1mm thick Leatherrite tapestry, Chrome finish,materials conforming to relevant IS Standard including necessary fittings of approved brand fixture and finishing etc.complete job as per approved shade and colour and as per Architecture drawing and Engineer in Charge.
12	Providing and fixing in position requisite nos. of three Seater Sofa unit of size 1880 (L) x 785 (D) x 730 (H) mm as per the approved drawing made up of Stainless Steel 202 grade 16 gauge 25.4 mm round pipe frame.Main frame made up of 15 x 30 x 1.6mm Stainless Steel 202 grade pipe and PVC Shoe is used in the bottom of the frame. seat & back assembly made up of 12mm commercial plywood having basic structure made up of wooden (marandi wood 100 x 100 mm battens), foam upholstery 150mm thick for seat with density 40kg/m3 and 70mm thick for back/side with density 32kg/m3 covered with 1mm thick Leatherrite tapestry, Chrome finish,materials conforming to relevant IS Standard including necessary fittings of approved brand fixture and finishing etc.complete job as per approved shade and colour and as per Architecture drawing and Engineer in Charge.
13	Providing and fixing in position requisite nos. of Centre Table unit of size 1200X600X450 MM as per the approved drawing made up of Stainless Steel 202 grade 16 gauge pipe frame, toughened glass 12mm thick Top Size 1200 x 600 MM and bottom Size 916 x 468 MM , Chrome finish,materials conforming to relevant IS Standard including necessary fittings of approved brand fixture and finishing etc. complete job as per approved shade and colour and as per Architecture drawing and Engineer in Charge.
14	Providing and fixing in position 1050x 325 mm beveled edge mirror of 6mm thick superior glass (of approved quality) complete with plastic moulded frame of approved make and shade fixed to cleats with C.P. brass /SS screws and washers complete job as per Engineer in Charge.
15	Providing and fixing in position minimum 380mm long Chromium Plated Brass hook Patti (of approved quality with min. wt. of 600gms.) having 6no. of hooks not less than 50mm length of approved make fixed to with SS screws etc. complete job as per Engineer in Charge.

&

- Any other items required to complete the job as per the Engineer-in-charge

3.3. Implementation Period:

The Contractor can start mobilizing his resources once the LOI/A is issued for timely implementation of job & is to be completed in all respect by the time as is mentioned in the Schedule-F. However, if due to any unforeseen reasons if the site is not available, Contractor shall be capable to execute the work in a shorter period. No additional payment shall be made on this account. The job is planned to be implemented in a period of Sixty (60) calendar days including holidays.

3.4. Implementing Agency:

The "Director, IIM Indore" (herein after known as "Employer" or the Employer shall be the implementing agency /Owner /Employer / Client. The Employer shall appoint officer for monitoring and day to day supervision. The observations and instruction issued by the Employer / or his representative shall be binding to the Contractor.

3.5. Bidder responsibilities on selection and Contract Award and Execution

The bidder shall visit and study the site situation, interact with employer, check-up the various elements of the works proposed, then make his own judgment regarding his scope in the tender. He shall also study the price schedule mode and system of payment and other related conditions, technical specifications, etc. before finalizing bid.

The bidder will be liable to deploy all categories of staff with their duties & duty places, responsibilities, with adequate experience and will abide with minimum wages fixed by Statutory Bodies for salaries (at various stages) etc. Non adherence shall not be permitted.

3.6. The "contract" is to be implemented within the time schedule as specified earlier in Guidance to Bidders, which is inclusive of holidays from the date of Work Order.

3.7. All bids are to be completed and returned to the Employer in accordance with these Instructions to Bidders.

3.8. Throughout these bid documents the term "Bid" and "Tender" and their derivatives (Bidder/tenderer, Bid/tendered," "bidding/tendering, etc.) are synonymous, the word "month" means a calendar month and the word "year" means a calendar year.

3.9. Obtaining and maintaining all statutory permission required to be obtained from Central, State or Local statutory authorities for the day-to-day activities related to the execution of the works shall be the responsibility of the Contractor. The employer shall provide the required authorization and assistance to obtain approvals. The documentation and other any requirement for obtaining such approvals shall have to be done by the Contractor at his own expenses.

3.10. RESPONSIBILITY OF THE BIDDER

3.10.1. The bidder shall be fully responsible for site review and event of the

Works conforming to relevant Indian standards as per scope of work and base specifications furnished in this Bid Document. The Contractor shall be responsible for design, execution of the job including Procurement, Construction, Complete Management, Coordination, Testing and Commissioning.

3.10.2. The bidder shall utilize optimally the land (allotted area) available for installation/construction of various facilities/components of the job and cost all components and allied works of the Contract. The details of the costing shall form part of the proposal. The bidder shall provide a detailed scheme of installation & commissioning, operation and maintenance.

3.10.3. The bidder shall take into consideration all aspects of the job at the time of bidding, namely, though not restricted to:

- ☐ Execution and management as per scope
- ☐ Procurement of requisite materials and manpower
- ☐ Civil Works including development and other services
- ☐ Quality control
- ☐ Environmental and social safeguards
- ☐ Security and risk coverage

(a) The bidder has to bear in mind that if selected for the award of contract he shall have to ensure that in any case no damage is caused to the environment while executing the Contract.

(b) The bidder if selected, as Contractor shall ensure that while carrying out operation for execution of various works, habitat animals are not disturbed.

(c) Necessary safety measures shall be the responsibility of the Contractor. Any loss of human/cattle or damages or so, shall be the responsibility of the Contractor including any liability and/or compensation to be paid towards the life lost damages so caused.

(d) All infrastructure works covered in the contract shall be so managed and executed that they maintain safe distance from the public roads and other structures, services and sensitive areas like hostels and residential areas.

(e) Cutting of trees shall not be permitted.

(f) Once the Contract is completed, the debris and other waste material shall be removed and shifted to safe place, as directed.

(g) The workmanship shall be of high order and quality so as to prevent accidents and damaging the environment and surroundings.

(h) No Damage in case shall be caused to the existing structure. The selected contractor shall be held responsible in occurrence of any such incident and will be responsible for the cost of required rectifications.

(i) Site shall be returned to the Employer as it was in the original condition and completely free of any garbage and temporary structures.

3.10.4. The bidder shall bear all costs associated with the preparation and submission of its bid, and the Employer in no case is responsible or liable for these costs, regardless of the outcome of the bidding.

3.10.5. The successful bidder shall make his own arrangements for all the materials, power and water required for all purposes in connection with the construction and implementation of the Contract. If possible the employer shall help for obtaining such facilities at an appropriate cost, which will be recovered, from the Contractor in a suitable way.

3.11. DATA / ASSISTANCE / FACILITIES TO BE MADE AVAILABLE BY THE EMPLOYER

3.11.1. The Employer or its authorized officer shall enter in to agreements with the successful bidder on the basis of the Contract finalized at the bidding stage. The bidder has to quote for all the works relevant to the Scope of the Works, without any exceptions.

3.11.2. The Employer shall provide access to the successful bidder throughout the period of the agreement, for reference to all available records, maps, drawings, reports and other technical data in its possession to assist the successful bidder in the execution of the work.

3.11.3. The major statutory permissions relating to the Contract shall be responsibility of the Employer. However the Contractor shall be responsible for day-to-day clearances. The Employer and its identified officers shall provide all help and assistance.

3.12. ELIGIBLE BIDDERS

3.12.1. After the bids have been received as per terms and conditions, the bids, which do not contain prescribed amount of EMD and Tender fee summarily be rejected and no objection shall be entertained. Those bids, which fulfill the criteria, shall be opened.

3.12.2. All recipients of the bid documents for the purposes of submitting a bid shall treat the contents of this document as private and confidential.

3.12.3. Employer reserves the right to alter the mode of selection, accept or reject any or all bids without assigning any reason thereof.

3.12.4. Bidders should be valid registered Contractor with either some Central Government Department/State Government Department/ Central Autonomous Body/ State Autonomous Body/ Central Public Sector Undertaking/ State Public Sector Undertaking/City Development Authority/ Municipal Corporation of City formed under any Act by Central/ State Government and published in Central/State Gazette

3.13. ELIGIBLE PLANT, MATERIALS, EQUIPMENT AND SERVICES

3.13.1. For the purpose of these Bid documents, the word "works" means civil, mechanical, interior electrical works, plants, materials and equipment to be hired, procured, tested, supplied and installed, field tested, commissioned together with the other services to be carried out by the Contractor, within the scope and ambit of the Contract.

3.13.2. All engineering processes, plants, materials and other resources required for the execution of this Contract shall be of Indian Origin to the extent possible. Imports if any shall be at the risk and the cost of the Contractor.

3.13.3. For purpose of this clause, "origin" means the place where the plants and materials or components parts thereof are mined, grown, or produced.

3.13.4. The Bidder should have at least Beam/Panel Saw, Laminate Press, Through-feed Edge Binder/Universal Edge Binder, CNC Router 550/CNC Router BHC 280,CNC Drilling Machine/ Multi-spindle drilling machine.

3.14. QUALIFICATION OF THE BIDDER

3.14.1. To be qualified for award of Contract, bidder shall have to fulfill following requirements:-

a. The bidder should have a minimum experience of three years for carrying out the similar nature of works. Similar nature of work implies Construction ,Supply & Installation of Furniture work using wood, Ply, MDF, aluminium, steel etc.

b. The bidder should have achieved at-least 100% of the estimated cost during the immediate last 3 consecutive financial year, as an average annual financial turnover (in similar / equivalent types of works only).Documentary evidence in support of this is to be produced. Certified copies of Income tax returns, Head wise audited balance sheets, Profit & Loss Account of minimum three years are required to be submitted.

c. The bidder shall have the Experience of having successfully completed works during the last 7 years ending last day of the month previous to the one in which applications are invited. The works completed upto previous day of last date of submission of tenders shall also be considered. (Documentary evidence in support of this is to be produced)

(i) Three similar completed works costing not less than the amount equal to 40% of estimated cost put to tender,

or

Two similar completed works, costing not less than the amount equal to 60% of the estimated cost put to tender,

or

One similar completed work of aggregate cost not less than the amount equal to 80% of the estimated cost.

and

(ii) One completed work of any nature (either part of (i) or a separate one) costing not less than the amount equal to 40% of the estimated cost put to

tender with some Central Government Department/State Government Department/ Central Autonomous Body/ State Autonomous Body/ Central Public Sector Undertaking/ State Public Sector Undertaking/City Development Authority/ Municipal Corporation of City formed under any Act by Central/ State Government and published in Central/State Gazette.

Note: The value of work done will be assessed as per the value mentioned in the experience/completion certificate issued by the respective client.

d. The bidder turns out to be a substantially responsive bidder as a result of evaluation of Technical Bid.

e. Bidder's price bid shall be evaluated, accepted with or without negotiations and decided by the Employer for award of contract.

f. The successful bidder shall submit a power of attorney authorizing the signatory of the bid to sign and execute the contract.

g. The bidder shall have to provide PAN No. Under income tax Act.

h. The bidder shall provide a valid EMD acceptable to Employer.

i. In case of joint venture or consortium, the bidder to whose name the bid issued shall be considered as lead partner.

3.14.2. The bidder shall also submit his methodology and work plan.

3.14.3. Contractor shall be agreeable with the conditions as mentioned in the document.

3.14.4. The bidder shall have the EPF A/C No.

3.15. JOINT VENTURES

a. In the event that the successful bidder is a consortium/joint venture formed of one or two companies, lead partner/prime Contractor in whose name the bid was issued shall be fully and solely responsible for the performance of contract and all works designed and executed under the contract.

b. Bids submitted by a consortium or joint venture of one or two firms, as partners shall comply with the following requirements:

c. The bid, and in case of a successful bid, the Contract Agreements shall be properly executed and signed so as to be legally binding on all partners.

d. The prime/ lead member for the consortium shall be authorized to insure liabilities and receive instruction for and on behalf of any or all partners of the consortium/joint venture and entire execution of the Contract including payment shall be done exclusively with the lead/prime member of the consortium;

e. Amendments or change of consortium partners, which are contrary to the consortium or joint venture agreement that formed the basis of Contractor's and shall not be permitted.

f. All partners of the consortium/joint venture shall be liable jointly and individually for the execution of the Contract in accordance with the Contract terms, and a relevant statement to this effect shall be included in the Bid Form and the Contract Agreement (in case of successful bid); and

g. A copy of consortium or joint venture agreement, including apportioning of work between the partners, by nature and by value of work, signed by legally authorized signatories of all the partners in the presence of a Magistrate of an Indian Court of Law/Notary Public, on a Rs.100 non-judicial stamp paper shall be attached with the bid.

h. Joint venture partner can submit only one bid. Failure to comply with this

clause may result in rejection of all bids where that party/agency/firm is attached.

i. A consortium shall be of maximum two partners.

j. Any individual bidder or member of a consortium cannot be member in another consortium and participate in this tender.

k. Bidder submitting their bid shall not be under liquidation, court receivership or similar proceeding.

3.16. ASSURANCE

The successful bidder shall be required to give satisfactory assurance of its ability and intention to complete the works pursuant to give the Contract, within the time set forth therein and according to the terms, conditions and specifications of contract.

3.17. SITE VISIT

3.17.1. Bidder is advised to depute a suitable team to visit the site to fully understand the job and ascertain the difficulties that may be encountered during execution of works and for obtaining all information for himself on his own responsibility that may be necessary for preparing the bid and entering into Contract. The site visits shall be entirely at bidder's own expense.

3.17.2. For the purpose of the visit the interested bidder may contact Chief Engineer's Office located in the Project Department, IIM Indore.

3.17.3. The bidders and any of his personnel or agents shall be granted permission by the Employer to enter upon his premises and lands for the purpose of such inspection, additional surveys and investigation if he proposes to do etc. but only upon the explicit condition that the bidder, his personnel or agents, shall release and indemnify the Employer and his Personnel and agents from and against all liability in respect thereof and shall be responsible for personal injury (whether fatal or otherwise), loss of or damage to property and any other loss, damage, costs and expenses however caused, which but for the exercise of such permission would not have arisen.

B. THE BIDDING DOCUMENTS

The details of work, bidding procedure, contract terms are prescribed in the bidding documents. The Bidding documents include the following volumes, together with any Amendments/Addenda there to which may be issued in accordance with this Clause.

Sr. No.	Contents
	Volume-I-A
1.	Invitation to bid
2.	Form of tender & contract data
3.	Instruction to bidders
	Volume-I-B
4.	Qualification criteria and evaluation procedure
5.	Qualification data sheets
	Volume-I-C
6.	General conditions of contract
7.	Special conditions of contract

All the pro forma attached with the document shall be filled in by the interested bidder.

3.18. The bidder shall submit hard copy of the Technical bid as per the instructions given elsewhere in this document.

3.19. The bidder is expected to examine carefully the Bidding Documents, including all instructions, forms, terms, conditions, Annexure, Appendix etc. as given in Bid document. There shall be a presumption on the part of the Employer, that the bidder has read all the documents in the entirety and the Tender offer has been made and presented accordingly.

3.20. For completing tender and required information the bidders shall use only standard PDF format specifically filled file name of the same document (eg. Service tax form.pdf), Bids submitted in any other format than specified here shall be rejected forthright without assigning any reasons.

3.21. PRE-BID MEETING (if required)

3.21.1. A prospective bidder requiring any clarification of the bidding documents may notify the Employer in writing or by fax (hereinafter, the term "fax" is deemed to include electronic transmission such as facsimile, cable and telex) at the Employer's address indicated in the Invitation for Bid. The Employer will respond to any request for clarification which he receives prior to holding of Pre-Bid Meeting(if required). Copies of the Employer's response will be forwarded to all recipients of the Bid documents, including a description of the enquiry but without identifying its source.

3.21.2. Pre-bid meeting, if required, shall be convened on February 12,2015 at 10:00 A.M. in the Project Department, IIM Indore.

3.21.3. The purpose of the meeting shall be to clarify issues and to answer questions on any matter that may have been raised by the prospective bidders in writing and received by the Employer’s office. No further queries shall be entertained after pre-bid meeting.

3.21.4. Non-attendance at the pre-bid meeting will not be a cause for disqualification of the bidder.

3.22. AMENDMENT OF BIDDING DOCUMENTS

3.22.1. At any time prior to the deadline for submission of bids, the Employer may, for any reason, whether at its own initiative or in response to a clarification requested by a prospective bidder, modify the Bidding Documents by amendment/addendum. These shall be uploaded on line.

3.22.2. The amendment/addendum shall be part of the Bidding Documents pursuant to relevant Clause and shall be uploaded online.

3.22.3. The bidders shall duly respond accordingly. The amendments/addenda along with their Bids, which shall form part of their Bids and there after shall become an integral part of the contract.

3.22.4. In order to afford prospective bidders reasonable time in which to take the amendment/addenda into account in preparing their bids, the Employer may, at its discretion, extends the deadline for the submission of bids.

3.23. LANGUAGE OF BID

The bid prepared by the bidder and all correspondence and documents relating to the bid exchanged by the bidder and the Employer shall be written in the English language. Supporting documents and printed literature furnished by the bidder may be written in another language, provided these are accompanied by a translation of its pertinent passages in English. Failure to comply with this condition may disqualify a bid. For purposes of interpretation of the bid, the English translation shall govern.

C. PREPARATION OF BIDS

3.24. DOCUMENTS COMPRISING THE BID (Two Bid System)

3.24.1. The bid prepared by the bidder shall comprise of the following documents:

a) EMD and Tender Fee (Original Copy only) kept in sealed envelope to be housed in a big envelope named technical bid folder along with the sealed envelope of Technical Bid

b) Technical Bid Folder (Submission of Hard Copy only)

c) Financial Bid Folder (Submission of Hard Copy Only)

The Single envelope containing documents (b)&(c) as mentioned above should reach, IIM Indore on or before February 20,2015 up to 2:00 P.M.

3.25. The Bidder shall submit with its bid the following attachments:

(a) Power of Attorney: a power of Attorney authorized by a Notary Public, indicating that the person(s) signing the bid has the authority to sign the bid and thus that the bid is binding upon the bidder during the full period of its validity in accordance with relevant clause.

(b) Bidder's Eligibility and Qualifications:

(i) Latest details of any significant changes in the bidder's management or financial position at the time of furnishing information should be submitted. (Failure to disclose such changes, if revealed later, may render the Tender liable to be treated as "Non-responsive" at the contractor's risk and cost.)

3.26. BID VALIDITY

3.26.1. The bid shall remain valid for a period not less than Ninety (90) days as specified under relevant clause of Contract data after the deadline for submission of bid.

3.27. EARNEST MONEY DEPOSIT

3.27.1. Earnest Money Deposit shall be of Rs. 4.41 Lacs only in the form of Banker's cheque / Demand Draft / Fixed Deposit Receipt (FDR) Payable In avour of the IIM Indore.

3.27.2. The EMD shall be drawn from any Nationalized or Scheduled Commercial Bank issued in favor of 'Indian Institute of Management, Indore' payable at Indore.

3.27.3. Any bid not secured in accordance with Clauses 2.2.10, 2.2.11 and

2.2.12 shall be rejected by the Employer as non-responsive, pursuant to relevant clause.

3.27.4. When contract for the work is finalized with a successful bidder, the EMD of the remaining unsuccessful bidders shall be returned.

3.28. FORMAT AND SIGNING OF BID

3.28.1. The Bidder shall prepare and submit Volume-I, Volume-II and Volume-III as described elsewhere.

3.28.2. The bid shall be duly signed as per the standard norms of Procurement.

3.28.3. No bidder shall participate in the bid of another for the contract in any relation whatsoever.

3.28.4. If the bid is made by a limited company or a limited corporation, it shall be signed by a duly authorized person holding a Power of Attorney for signing the bid in which case a certified copy of the power of attorney shall accompany the Bid.

D. SUBMISSION OF BIDS

3.29. SEALING AND MARKING OF BIDS.

The Bid shall be marked and sealed in single envelope with name of work as follows:

"BID FOR Construction, Supply & Installation of Furniture/Fixture in Faculty Residence, Visiting Faculty Residence & IPM Hostels at IIM Indore"

3.29.1. The above envelopes shall be sealed with wax.

3.29.2. The envelopes shall be addressed and submitted to the Director, IIM Indore:

3.29.3. No bid shall be accepted unless it is properly sealed and marked as instructed above. Bidders shall not be allowed to fill in or seal their Bids at the Employer's office.

3.29.4. If the packet and the envelope are not sealed with wax and marked as instructed above, the Employer shall assume no responsibility for the misplacement or premature opening of the bid submitted. A Bid opened prematurely due to this cause shall be rejected by the Employer and returned to the Bidder

3.30. DEADLINE FOR SUBMISSION OF BIDS

3.30.1. The bids must be received by the Employer at the address as specified in relevant clause not later than the time and date as specified under the Contract data.

3.30.2. The Employer may, at its discretion, extend the deadline for the submission of bids by amending the Bidding Documents in accordance with relevant clause, in which case all rights and obligations of the Employer and bidders previously subject to the original deadline shall thereafter be subject to the deadline as extended.

3.31. LATE BIDS

3.31.1. Any bid received by the Employer after the deadline of submission of bids prescribed in clause 2.2.14 will be returned unopened to the bidder

3.32. MODIFICATION AND WITHDRAWAL OF BIDS

3.32.1. The bidder may withdraw its bid after the bid submission, provided that written notice of the withdrawal is received by the Employer prior to the deadline prescribed for submission of bids.

3.32.2. Withdrawal or Modification of a bid between dead line for submission of bids and the expiration of the original period of bid validity specified in bid form may result in forfeiture of the EMD.

E. TECHNICAL & FINANCIAL BID OPENING AND EVALUATION

3.33. OPENING OF THE TECHNICAL BIDS BY EMPLOYER

3.33.1. First of all envelope containing earnest money & Tender will be checked.

Technical Proposal not containing the EMD and Tender fee will be out-rightly rejected.

3.33.2. The Employer will open Bids of all the bidders in the presence of Bidders representatives who choose to attend the opening in the office of the Chief Engineer, Project Department, IIM Indore.

3.33.3. The time and date as specified under relevant clause of the Contract data at the same address.

3.33.4. Bidder's representatives shall sign a register as proof of their attendance. In the event of the specified date of Bid opening being declared a holiday for the Employer, the Bids shall be opened at the appointed time and location on the next working day, or otherwise intimated.

3.33.5. The bidder shall nominate only one representative to attend the Bid opening on his/her behalf with proper authorization. No person other than nominated persons shall be permitted to attend Bid opening.

3.33.6. Bidders' name, Bid modifications or withdrawals, the presence or absence of requisite EMD and other such details as the Employer, at its discretion, may consider appropriate, will be announced at the opening.

3.33.7. Bid (and modifications sent pursuant to relevant clause) that are not opened and read out at Bid opening will not be considered for further evaluation, regardless of the circumstances.

3.33.8. The Employer will prepare minutes of the Bid opening for their own records.

3.34. PRELIMINARY EXAMINATION

3.34.1. Initially only technical data shall be evaluated.

3.34.2. The Employer shall then examine the bids to determine whether they are complete and satisfy the requirements of the Instructions to Bidders, whether

required sureties have been furnished, whether the documents have been properly signed, and whether the bids are generally in order.

3.34.3. Prior to the detailed evaluation, pursuant to relevant clause, the Employer shall determine the substantial responsiveness of each bid to the Bidding Documents. A substantially responsive bid is one, which conforms to the terms, conditions, and specifications of the Bidding Documents without material deviation or reservation. A material deviation or reservation is one which affects in any substantial way the scope, quality or performance of the Works, or which limits in any substantial way, inconsistent with the Bidding Documents, the Employer's rights or the Bidder's obligations under the Contract, and the rectification of which deviation or reservation would affect unfairly the competitive position of other bidders presenting substantially responsive Bids.

3.34.4. A bid determined as not substantially responsive shall be rejected by the Employer and cannot subsequently be made responsive by the bidder by correction of the nonconformity.

3.34.5. Employer may waive at his discretion any minor informality or non-conformity or irregularity in a Bid, which does not constitute a material deviation, provide such waiver, does not prejudice or affect the relative ranking of any Bidder. It may be noted that the employer reserves the right to take final decision about responsiveness of the bidder.

3.34.6. The Bidder, whose Technical Bids are received and opened, shall be further short listed after undertaking detailed evaluation.

3.35. TECHNICAL EVALUATION

3.35.1. The Employer will carry out a detailed evaluation of the bids previously determined to be substantially responsive in order to determine whether the technical aspects are in accordance with the requirements set forth in the Bid Documents. The data called for the detailed evaluation is given in relevant clause in order to reach such a determination, the Employer will examine and compare the technical aspects of the Bids on the basis of the information supplied by the Bidders, taking into account the following factors;

a. Overall completeness and compliance with the Employer's requirements; deviations from the Employer's Requirements to the Bid and those deviations not so identified; suitability of the works offered in relation to the environmental and climatic conditions prevailing at the Site; and quality, function and operation of any process control concept included in the Bid. That does not meet minimum acceptable standards of completeness; consistency and detail will be rejected for non-responsiveness.

b. Achievement of specified performance criteria by the works.

c. Any other relevant factors, if any, listed in the Bid Data Sheet, or that the Employer deems necessary or prudent to take into consideration.

3.36. CONTACTING THE EMPLOYER

3.36.1. Subject to this clause, no bidder shall contact the Employer on any matter relating to its bid, from the time of the bid opening to the time the Contract is awarded.

3.36.2. Any effort by a bidder to influence the Employer in the Employer's decisions in respect of bid evaluation or Contract award shall result in the rejection of that bidder's bid.

3.37. EMPLOYER'S RIGHT TO ACCEPT ANY BID AND TO REJECT ANY / ALL BIDS

3.37.1. The Employer reserves the right to accept or reject any bid and to annul the bidding process and reject all bids at any time prior to award of contract, without thereby incurring any liability to the affected bidder or bidders or any obligation to inform the affected bidder or bidders of the grounds for the Employer's action. Employer also reserves the right to modify the selection criteria.

3.38. OPENING OF PRICE PROPOSALS

3.38.1 The bidder's names, the Bid Prices, the total amount of each bid, and discounts and such other details as the Employer may consider appropriate, will be announced and recorded by the Employer at the opening. The bidder's representatives will be required to sign this record.

3.38.2 The Employer shall prepare minutes of the bid opening, including the information disclosed to those present in accordance with this Sub-Clause.

3.39. PROCESS TO BE CONFIDENTIAL

3.39.1 Information relating to the examination, clarification, evaluation and comparison of bids and recommendation for the award of a contract shall not be disclosed to bidders or any other persons not officially concerned with such process until the award to the successful bidder has been announced. Any effort by a bidder to influence the Employer's, processing of bidders or award decisions may result in the rejection of the bidder's bid.

3.40. CLARIFICATION OF PRICE PROPOSALS AND CONTACTING THE EMPLOYER

3.40.1 To assist in the examination, evaluation and comparison of price proposals, the Employer may, at its discretion, ask any bidder for clarification of their bids including break-up of prices/rates. The request for clarification and the response shall be in writing or by cable, but no change in the price or substance of the bid shall be sought, offered or permitted.

3.40.2 However, as a result of clarifications obtained on their technical data, if the Employer desires to modify any of the stipulation/condition, he will write to all the bidders with a request to submit their price tags for such changes in a separate sealed envelope; which shall be opened and evaluated along with their original financial statements.

3.40.3 Subject to relevant sub-clause, no bidder shall contact the Employer on any matter relating to its bid from the time of opening of price proposals to the time the contract is awarded. If the bidder wishes to bring additional information to the notice of the Employer, it should do so in writing.

3.40.4 Any effort by the bidder to influence the Employer in the employer's evaluation of price proposals, bid comparison or contract award decisions may result in the rejection of the bidder's bid.

3.41. PRELIMINARY EXAMINATION OF PRICED PROPOSALS AND DETERMINATION OF RESPONSIVENESS

3.41.1 A substantially responsive bid is one which conforms to all the terms, conditions and requirements of the bidding documents, without material deviation

or reservation and includes the amendments and changes, if any, requested by the employer during the evaluation of the bidder's technical proposal.

3.41.2 If a price proposal is not substantially responsive, it will be rejected by Employer, and may not subsequently be made responsive by correction or withdrawal of the nonconforming deviation or reservations.

3.42. COMPARISON OF PRICE PROPOSALS

3.42.1 The Employer will evaluate and compare only the bids determined to be substantially responsive in accordance with relevant clause.

3.42.2 The Employer's evaluation of a bid will take into account, in addition to the bid prices indicated in the Schedule of Prices, the following costs and factors that will be added to each Bidder's bid price in the evaluation using pricing information available to the Employer, in the manner and to the extent of the requirement of the Employer.

(a) The additional price, if any, reflected in the price proposal. If the price stated is not realistic the bid is liable to be rejected.

(b) Compliance with the time schedule called for in the Appendix to Price Proposal;

If a discount has been asked by the committee and subsequently offered by the bidders at the time of opening, such discount will be applied pro-rata against each item, the Employer reserves the right to reject, at its sole discretion, any or all evaluated Price Proposals and if necessary, will call for submission of new Price Proposals. In order to allow comparison on a common basis, each Price Proposal will be carefully scrutinized in accordance with the procedure outlined in Clauses 3.42.1 to 3.42.3 and total price (TP) will be determined.

F. AWARD OF CONTRACT

3.43. AWARD CRITERIA

3.43.1 Following completion of evaluation Technical and Price Proposals, final ranking of the Proposals will be determined and the Bidder securing the optimum marks will be awarded the contract.

3.44. NOTIFICATION OF AWARD

3.44.1 Prior to the expiry of the period of bid validity, the Employer shall notify the successful bidder in writing by letter or by e-mail , (hereinafter called "Letter of Intent/Acceptance") by the Employer.

3.44.2 The Work Order reaching the selected bidder shall conclude the contract and time of performance shall start running from the date of issue of Work Order or as may be intimated in the LOI/A.

3.45. SIGNING OF CONTRACT

3.45.1 At the time of notification of award, the contractor shall arrange supply of non-judicial stamp paper of value Rs.100/- or as per the rules/regulation of the local Govt. and execute the Contract Agreement provided in these Bidding Documents, incorporating all agreements between the parties.

3.45.2 Within three (03) days of receipt of the Contract Agreement, the successful bidder shall sign and date the Contract Agreement and return it to the Employer. Extension of the time contained in this clause shall be at the sole discretion of the employer. Failure on the part of Contractor to sign the

contract agreement within the prescribed time shall empower the employer to cancel the Letter of Intent/Acceptance and take appropriate action against the contractor including forfeiture of the 'EMD" and black listing of the bidder.

3.45.3 The person to sign the Contract Agreement shall be the person as described in relevant clause.

3.45.4 It shall be incumbent upon the successful bidder to pay stamp duty on the Contract and all other legal charges for preparation of the Contract Agreement, as ruling on the date of execution of the Contract as specified in the Conditions of Contract.

3.46. PERFORMANCE GUARANTEE

3.46.1 The successful tenderer, after alottment of work will be referred to as the contractor, shall have to deposit an amount equal to 5% of the tendered and accepted value of the work (without limit) as performance guarantee in one of the following forms:

(i) Government securities.

(ii) Fixed Deposit Receipt (FDR) of a Scheduled Bank.

(iii) An irrevocable bank guarantee bond of any scheduled bank or the State Bank of India in the prescribed form given in Annexure.

Within a period ranging from 10 days of issue of the letter of acceptance. This period can be further extended at the written request of the contractor by the Engineer-in-charge for a maximum period of 15 days with late fee @ 0.1% per day, of performance guarantee amount. The letter for commencement of work shall be issued to the contractor only after he/she submits the performance guarantee in an acceptable form.

3.46.2 Refund of this deposit will be regulated as per the regulation laid down for this purpose in the CPWD works manual.

3.47. SECURITY DEPOSIT

3.47.1 The selected bidder have to deposit the security deposit also.The security deposit shall be collected by deductions from the running bill of the contractors a sum @ 2.5% of the gross amount of the bill and shall be deducted from each running bill as well as final bill of the contractor. Such deductions shall be made unless the contractor has deposited the amount of security at the rate mentioned in Government securities or Fixed Deposit Receipts. This is in addition to the performance guarantee that the contractor is required to deposit.

3.47.2 Security deposit can be released against bank guarantee issued by a schedule bank on its accumulation to a minimum amount of Rs. 5 lakhs subject to the condition that amount of any bank guarantee except last one, shall not be less than Rs. 5 lakhs

3.47.3 The Bank Guarantee submitted against Security Deposit shall initially be valid up to the stipulated date of completion of the work plus maintenance period as defined under clause 17 of GCC which shall be extended further time to time depending upon extension of contract granted under provisions of clause 2 and clause 5.

3.47.4 Refund of this deposit will be regulated as per the regulation laid down for this purpose in the CPWD works manual.

VOLUME I-B

- **QUALIFICATION CRITERIA AND EVALUATION PROCEDURE**
- **QUALIFICATION DATA SHEETS**

4. QUALIFICATION CRITERIA AND EVALUATION PROCEDURE

The bids received under shall be assessed and evaluated based on the qualification criteria and evaluation procedure prescribed hereunder:

ASSESSMENT OF BIDS

Bid applications should normally be assessed using following process:

Stage 1	-	Preliminary screening
Stage 2	-	Detailed assessment
Stage 3	-	Final assessment based on opening of price bid

Stage 1
4.1 PRELIMINARY SCREENING

Screening Criteria: Preliminary screening should typically establish whether an application meets the following criteria in respect of soundness and credibility of the bidder:

☐ Is application submitted by the applicant a responsive application?

☐ Is the applicant commercially sound?

☐ Is the applicant fulfils the criteria laid down under the clause 3.12.1,3.13.4, 3.14.1 to 3.14.4 mentioned above ?

Over and above the bidder being responsive, he will be subject to the following criteria for initial screening. Detail screening of those bids will be taken up which satisfies the initial screening criteria.

4.2 DETAILED ASSESSMENT

The criteria to be assessed during detailed assessment comprise establishing whether the applicant has adequate:

- ☐ Technical capability including organizational capacity, relevant experience.
- ☐ Financial capacity.

FINANCIAL CAPACITY

4.2.1 Definitions
"Financial Statements" consist of profit-and-loss statements, balance sheet, and if available, cash flow statements (also called "Sources and Applications of funds" statements).

4.2.2 "Annual Turnover": Turnover of last five years will be considered for evaluation. Income from "*contractual receipts"* only will be taken onto consideration. The income such as Interest income will not be considered.

4.3 Documentation to be used and referred:

All applicants have to submit audited annual reports/financial reports of minimum last three years. (If Audited Annual Report is not available, Un-audited Annual Reports shall be accepted subject to duly authentication of Company Secretary of the Annual Reports). Firms that do not publish financial statements, such as partnerships, submit specially prepared statements. A qualified external auditor should certify such statements. Annual reports shall include the auditor's certification. Cash flow statements shall be submitted as a part of the post qualification data and technical bid. The Contractor shall also submit copy of the returns of Service Tax for last two years.

4.4 TECHNICAL QUALIFICATIONS

Technical qualifications include all factors determining an applicant's technical abilities / experience.

4.4.1 EXPERIENCE

Factors used in evaluating experience of the bidder are as follows:

(a) Experience as Contractor in or related works as is specified in the respective clause.

This factor shall be assessed on the basis of number of contracts of similar nature and magnitude of experience as contractor carried out in last seven years subjected to the production of relevant experience certificate issued from the respective client.

4.5 SCORING SYSTEM

4.5.1 Weightage and Scores

The criteria for evaluation of the performance of contractors for pre-eligibility shall

be assessed by assignee scores over as follows:

	Attributes	**Evaluation**
(a)	Financial strength **(20 marks)**	
	(i) Average annual Turn over 16 marks (ii) Solvency Certificate 4 marks	i) 60% marks for minimum eligibility criteria (ii) 100% marks for twice the minimum eligibility criteria or more In between (i) & (ii) – on pro-rata basis
(b)	Experience in similar class of works **(20 marks)**	
		i) 60% marks for minimum eligibility criteria ii) 100% marks for twice the minimum eligibility criteria or more In between (i) & (ii) – on pro-rata basis
(C)	Performance on works (time over run) **(20 marks)**	
	Parameter Calculation For points	Score (Maximum Marks 20)
	If TOR =	1.00 2.00 3.00 >3.50
	(i) Without levy of compensation	20 15 10 10
	(ii) With levy of compensation	20 5 0 –5
	(iii) Levy of compensation not decided	20 10 0 0
TOR = AT/ST, where AT=Actual Time; ST=Stipulated Time. **Note:** Marks for value in between the stages indicated above is to be determined by straight line variation basis.		
(d)	Performance of works (Quality) **(15 marks)**	
	(i) Very Good (ii) Good (iii) Fair (iv) Poor	15 10 5 0
(e)	Personnel and Establishment **(Max. 10 marks)**	
	i) Graduate Engineer ii) Diploma holder Engineer iii) supervisory/Foreman	3 marks for each 2 marks for each upto Max.4 marks 1 mark for each upto Max. 3 marks

(f)	Plant & Equipment **(Max. 15 marks)**	
	i) Beam/Panel Saw	1.5 marks for each upto Max. 3 marks
	ii) Laminate Press	1.5 marks for each upto Max. 3 marks
	iii) Through-feed Edge Binder / Universal Edge Binder	1.5 marks for each upto Max. 3 marks
	iv) CNC Router 550/ CNC Router BHC 280.	1.5 marks for each upto Max.3 marks
	v) CNC Drilling Machine/ Multi-spindle drilling machine	1.5 marks for each upto Max.3 marks

To qualify, the Contractor shall score minimum 60 marks in total.

4.6 Information to be provided

4.6.1 Please fill up all the forms attached herewith providing relevant information with supporting documents.

4.6.2 Also provide technical bid, financial bid & other relevant information asked.

4.7 Overall selection

The evaluation committee shall decide the most capable Bidder based on the technical evaluation of papers. The financial bids shall be opened for the qualified bidders. Contract will be negotiated with the best-qualified-evaluated bidder. However Evaluation Committee and the Employer, the Employer reserves the right to vary qualifying requirement without intimation to the bidders.

5.0 QUALIFICATION DATA SHEETS TO BE FILLED UP BY THE BIDDER

Sl. no.	Information	Format of submission
5.1	Obligation / Compliance To Be Insured By Contractor	Annexure- "A"
5.2	Tax	Annexure- 'B'
5.3	Indemnity by contractor	Annexure- 'C'
5.4	Joint Venture Details	Annexure- 'D'
5.5	Certificate in prescribed format	Annexure- 'E'
5.6	Letter of Transmittal	Annexure- 'F'

Note:

1 If necessary, additional sheets may be added to the forms.

2. Some of the forms will require attachments. Such attachments should be clearly marked as follows: Attachment I to Form # Attachment 2 to Form #. etc.

Annexure- "A"

OBLIGATION / COMPLIANCE TO BE INSURED BY CONTRACTOR

Sl.No	Items	Compliance of Contractor (To be filled by Contractor)	
		YES	NO
1	Registration		
2	Compliance of provisions of Child Labour Act, and Workmen compensation Act		
3	To ensure treatment in case of accident / injuries suffered in performance of work including wages and compensation under WC Act.		
4	Send Accident report to Regional Labour Commissioner (RLC).		

Annexure –'B'

Tax

Attach copy of minimum last three years tax returns details

Annexure- 'C'

INDEMNITY (To be filled by Contractor)

I on behalf of M/s …… hereby agree and undertake that I have understood all the safety rules and procedures and all staff working on behalf of M/s …… will abide by all safety rules and procedures. I declare that I M/s …….. will be responsible for any safety violations/ accident etc. IIM Indore will not be responsible in case of any accident / incident and will not compensate financially or otherwise.

I hereby declare that I am sole responsible on behalf of M/s.. …….. for giving such declaration.

---------- ----------

Name of Indemnifier Signature of Indemnifier

Stamp/Seal of the Indemnifier /Contractor

Annexure- 'D'

Joint Venture Details

A copy of the joint venture agreement must be attached to Form. In case the joint venture agreement is not acceptable to IIM, the joint venture may be requested to modify the agreement accordingly. Failure to submit a modified Joint venture agreement within three days upon receipt by the applicant of the request for modification will disqualify the applicant for further consideration.

Names of all partner of a joint venture		**Name of firm**	**Financial stake of a firm (In percentage)**
1	Lead partner		
2	Partner		
3	Partner		

Joint Venture Details (to be continued) Enclosure to be attached with Joint Venture Agreement

Name and address of JV	**Role and Responsibilities (Specify in details)**	**Financial stake in percentage**

SIGNED ON BEHALF OF:

(Name of Lead Partner) (Name of Joint Venture Consortium Member)

CONSTITUTED ATTORNEY **CONSTITUTED ATTORNEY**

Annexure- 'E'

CERTIFICATE

(to be provided on letter head of the firm)

I hereby certify that the above firm has not been ever blacklisted by any Central/State Government/Public Undertaking/Institute on any account.

I also certify that the above information is true and correct. In every respect and in any case at a later date, if it is found that any details provided above are incorrect, any contract given to the above firm may be summarily terminated and the firm blacklisted.

Date:
Place:

Signature of Contractor

Annexure- 'F'
Letter of Transmittal

(to be provided on letter head of the firm)

From:
_____
_____

To:
The Director, IIM Indore
Prabandh Shikhar, Rau-Pithampur Road,
Indore – 453 556 (M.P.)

Subject: Submission of bids for the work of "Construction, Supply & Installation of Furniture/Fixture in Faculty Residence, Visiting Faculty Residence & IPM Hostels at IIM Indore."

Sir,

Having examined the details given in press notice and bid document for the above work, I/we hereby submit the relevant information.

1. I/we hereby certify that all the statement made and information supplied in the tender document and accompanying statement are true and correct.

2. I/we have furnished all information and details necessary for eligibility and have no further pertinent information to supply.

3. I/we submit the requisite certified solvency certificate and authorize the IIM Indore authorities to approach the Bank issuing the solvency certificate to confirm the correctness thereof. I/we also authorize IIM Indore authorities to approach individuals, employers, firms and corporation to verify our competence and general reputation.

4. I/we submit the following certificates in support of our suitability, technical knowledge and capability for having successfully completed the following works:

Name of work

Certificate from

Enclosures: Duly filled form "A" to "H"
Seal of bidder

Date of submission:

Signature(s) of Bidder(s).

FORM 'A'
FINANCIAL INFORMATION

I. Financial Analysis – Details to be furnished duly supported by figures in balance sheet/ profit & loss account for the last five years duly certified by the Chartered Accountant, as submitted by the applicant to the Income Tax Department (Copies to be attached).

Years

(i) Gross Annual turn over on construction works.
(ii) Profit/Loss.

II. Financial arrangements for carrying out the proposed work.

III. Solvency Certificate from Bankers of the bidder in the prescribed Form "B".

Signature of Chartered Accountant with Seal

Signature of Bidder(s).

FORM "B"
FORM OF BANKERS' CERTIFICATE FROM A SCHEDULED BANK

This is to certify that to the best of our knowledge and information that M/s./Sh…….having marginally noted address, a customer of our bank are/is respectable and can be treated as good for any engagement upto a limit of Rs…… (Rupees……)

This certificate is issued without any guarantee or responsibility on the bank or any of the officers.

(Signature)
For the Bank

NOTE (1) Bankers certificates should be on letter head of the Bank, sealed in cover addressed to tendering authority.
(2) In case of partnership firm, certificate should include names of all partners as recorded with the Bank.

FORM 'C'

DETAILS OF ALL WORKS OF SIMILAR CLASS COMPLETED DURING THE LAST SEVEN YEARS ENDING LAST DAY OF THE MONTH …….

Sl.No.	Name of work/ project and location	Owner or sponsoring organization	Cost of work (In Rs.)	Date of commencement as per contract	Stipulated date of completion	Actual date of completion	Litigation/ arbitration cases pending/ in progress with details*	Name and address/ telephone of the officers to whom reference may be made	Remarks
1	2	3	4	5	6	7	8	9	10

***** Indicate gross amount claimed and amount awarded by the Arbitrator.

Signature of Bidder(s)

FORM 'D'
PROJECTS UNDER EXECUTION OR AWARDED

Sl.No.	Name of work/ project and location	Owner or sponsoring organization	Cost of work (In Rs.)	Date of commencement as per contract	Stipulated date of completion	Upto date percentage progress of work	Slow progress if any and reason thereof	Name and address/ telephone of the officers to whom reference may be made	Remarks
1	2	3	4	5	6	7	8	9	10

Certified that the above list of works is complete and no work has been left out and that the information given is correct to my knowledge and belief.

Signature of Bidder(s)

FORM 'E'

PERFORMANCE REPORT OF WORKS REFERRED TO IN FORMS "B" &"C"

1. Name of work/project & location
2. Agreement no.
3. Estimated cost
4. Tendered cost
5. Date of start
6. Date of completion
   - (i) Stipulated date of completion
   - (ii) Actual date of completion
7. Amount of compensation levied for delayed completion, if any
8. Amount of reduced rate items, if any
9. Performance Report

(1) Quality of work	Very Good/Good/Fair/Poor
(2) Financial soundness	Very Good/Good/Fair/Poor
(3) Technical Proficiency	Very Good/Good/Fair/Poor
(4) Resourcefulness	Very Good/Good/Fair/Poor
(5) General Behaviour	Very Good/Good/Fair/Poor

Dated: Executive Engineer or Equivalent

FORM "F"
STRUCTURE & ORGANISATION

1. Name & address of the bidder

2. Telephone no./Telex no./Fax no.

3. Legal status of the bidder (attach copies of original document defining the legal status)
   (a) An Individual
   (b) A proprietary firm
   (c) A firm in partnership
   (d) A limited company or Corporation

4. Particulars of registration with various Government Bodies (attach attested photocopy)
Organization/Place of registration No.

   1.
   2.
   3.

5. Names and titles of Directors & Officers with designation to be concerned with this work.

6. Designation of individuals authorized to act for the organization

7. Was the bidder ever required to suspend construction for a period of more than six months continuously after he commenced the construction? If so, give the name of the project and reasons of suspension of work.

8. Has the bidder, or any constituent partner in case of partnership firm, ever abandoned the awarded work before its completion? If so, give name of the project and reasons for abandonment.

9. Has the bidder, or any constituent partner in case of partnership firm, ever been debarred/black listed for tendering in any organization at any time? If so, give details.

10. Has the bidder, or any constituent partner in case of partnership firm, ever been convicted by the court of law? If so, give details.

11. In which field of Civil Engineering construction the bidder has specialization and interest?

12. Any other information considered necessary but not included above.

Signature of Bidder(s)

FORM 'G'

DETAILS OF TECHNICAL & ADMINISTRATIVE PERSONNEL TO BE EMPLOYED FOR THE WORK

Sl No.	Designation	Total number	Number available for this work	Name	Qualifications	Professional experience and details of work carried out	How this would be involved in this work	Remarks
1	2	3	4	5	6	7	8	9

Signature of Bidder(s)

FORM 'H'
DETAILS OF CONSTRUCTION PLANT AND EQUIPMENT LIKELY TO BE USED IN CARRYING OUT THE WORK

Sl .No.	Name of equipment	Nos	Capacity or type	Age	Condition	Ownership status			Current location	remarks
						Presently owned	Leased	To be purchased		

Signature of Bidder(s)

VOLUME I – C

6.0 GENERAL CONDITION OF CONTRACT

CLAUSES OF CONTRACT

CLAUSE 1

(i) The contractor shall submit an irrevocable Performance Guarantee of 5% (Five percent) of the tendered amount in addition to other deposits mentioned elsewhere in the contract for his proper performance of the contract agreement, (not withstanding and/or without prejudice to any other provisions in the contract) within period specified in Schedule 'F' from the date of issue of letter of acceptance. This period can be further extended by the Engineer-in-Charge up to a maximum period as specified in schedule 'F' on written request of the contractor stating the reason for delays in procuring the Performance Guarantee, to the satisfaction of the Engineer-in-Charge. This guarantee shall be in the form of Cash (in case guarantee amount is less than Rs. 10,000/-) or Deposit at Call receipt of any scheduled bank/Banker's Cheque of any scheduled bank/Demand Draft of any scheduled bank/Pay Order of any scheduled bank (in case guarantee amount is less than Rs. 1,00,000/-) or Government Securities or Fixed Deposit Receipts or Guarantee Bonds of any Scheduled Bank or the State Bank of India in accordance with the form annexed hereto. In case a fixed deposit receipt of any Bank is furnished by the contractor to the Government as part of the performance guarantee and the Bank is unable to make payment against the said fixed deposit receipt, the loss caused thereby shall fall on the contractor and the contractor shall forthwith on demand furnish additional security to the Government to make good the deficit.

(ii) The Performance Guarantee shall be initially valid up to the stipulated date of completion plus 60 days beyond that. In case the time for completion of work gets enlarged, the contractor shall get the validity of Performance Guarantee extended to cover such enlarged time for completion of work. After recording of the completion certificate for the work by the competent authority, the performance guarantee shall be returned to the contractor, without any interest. However, in case of contracts involving maintenance of building and services/any other work after construction of same building and services/other work, then 50% of Performance Guarantee shall be retained as Security Deposit. The same shall be returned yearwise proportionately.

(iii) The Engineer-in-Charge shall not make a claim under the performance guarantee except for amounts to which the Director, IIM Indoreis entitled under the contract (not withstanding and/or without prejudice to any other provisions in the contract agreement) in the event of:

a. Failure by the contractor to extend the validity of the Performance Guarantee as described herein above, in which event the Engineer-in-Charge may claim the full amount of the Performance Guarantee.
b. Failure by the contractor to pay Director, IIM Indore any amount due, either as agreed by the contractor or

determined under any of the Clauses/Conditions of the agreement, within 30 days of the service of notice to this effect by Engineer-in-Charge.

(iv) In the event of the contract being determined or rescinded under provision of any of the Clause/Condition of the agreement, the performance guarantee shall stand forfeited in full and shall be absolutely at the disposal of the Director, IIM Indore.

CLAUSE 1 A
Recovery of Security Deposit

The person/persons whose tender(s) may be accepted (hereinafter called the contractor) shall permit Government at the time of making any payment to him for work done under the contract to deduct a sum at the rate of 2.5% of the gross amount of each running and final bill till the sum deducted will amount to security deposit of 2.5% of the tendered value of the work. Such deductions will be made and held by Government by way of Security Deposit unless he/they has/have deposited the amount of Security at the rate mentioned above in cash or in the form of Government Securities or fixed deposit receipts. In case a fixed deposit receipt of any Bank is furnished by the contractor to the Government as part of the security deposit and the Bank is unable to make payment against the said fixed deposit receipt, the loss caused thereby shall fall on the contractor and the contractor shall forthwith on demand furnish additional security to the Government to make good the deficit.

All compensations or the other sums of money payable by the contractor under the terms of this contract may be deducted from, or paid by the sale of a sufficient part of his security deposit or from the interest arising therefrom, or from any sums which may be due to or may become due to the contractor by Government on any account whatsoever and in the event of his Security Deposit being reduced by reason of any such deductions or sale as aforesaid, the contractor shall within 10 days make good in cash or fixed deposit receipt tendered by the State Bank of India or by Scheduled Banks or Government Securities (if deposited for more than 12 months) endorsed in favour of the Engineer-in-Charge, any sum or sums which may have been deducted from, or raised by sale of his security deposit or any part thereof. The security deposit shall be collected from the running bills and the final bill of the contractor at the rates mentioned above.

The security deposit as deducted above can be released against bank guarantee issued by a scheduled bank, on its accumulations to a minimum of Rs. 5 lac subject to the condition that amount of such bank guarantee, except last one, shall not be less than Rs. 5 lac. Provided further that the validity of bank guarantee including the one given against the earnest money shall be in conformity with provisions contained in clause 17 which shall be extended from time to time depending upon extension of contract granted under provisions of clause 2 and clause 5.

In case of contracts involving maintenance of building and services/any other work after construction of same building and services/other work, then 50% of Performance Guarantee shall be retained as Security Deposit. The same shall be returned yearwise proportionately.

Note-1: Government papers tendered as security will be taken at 5% (five per cent) below its

market price or at its face value, whichever is less. The market price of Government paper
would be ascertained by the Executive Engineer at the time of collection of interest and the
amount of interest to the extent of deficiency in value of the Government paper will be withheld
if necessary.
Note-2: Government Securities will include all forms of Securities mentioned in Rule No. 274
of the G.F. Rules except fidelity bond. This will be subject to the observance of the condition
mentioned under the rule against each form of security.
Note-3: Note 1 & 2 above shall be applicable for both clause 1 and 1A

CLAUSE 2
Compensation for Delay
If the contractor fails to maintain the required progress in terms of clause 5 or to complete the work and clear the site on or before the contract or extended date of completion, he shall, without prejudice to any other right or remedy available under the law to the Government on account of such breach, pay as agreed compensation the amount calculated at the rates stipulated below as the authority specified in schedule 'F' (whose decision in writing shall be final and binding) may decide on the amount of tendered value of the work for every completed day/month (as applicable) that the progress remains below that specified in Clause 5 or that the work remains incomplete.
This will also apply to items or group of items for which a separate period of completion has been specified.

(i) Compensation @ 1.5 % per month of delay for delay of work to be computed on per day basis Provided always that the total amount of compensation for delay to be paid under this Condition shall not exceed 10% of the Tendered Value of work or of the Tendered Value of the item or group of items of work for which a separate period of completion is originally given.

The amount of compensation may be adjusted or set-off against any sum payable to the Contractor under this or any other contract with the Government. In case, the contractor does not achieve a particular milestone mentioned in schedule F, or the re-scheduled milestone(s) in terms of Clause 5.4, the amount shown against that milestone shall be withheld, to be adjusted against the compensation levied at the final grant of Extension of Time. With-holding of this amount on failure to achieve a milestone, shall be automatic without any notice to the contractor. However, if the contractor catches up with the progress of work on the subsequent milestone(s), the withheld amount shall be released. In case the contractor fails to make up for the delay in subsequent milestone(s), amount mentioned against each milestone missed subsequently also shall be withheld. However, no interest, whatsoever, shall be payable on such withheld amount.

CLAUSE 2A
Incentive for early Completion
In case, the contractor completes the work ahead of updated stipulated date of completion considering the effect of extra work (to be calculated on pro-rata basis as cost of extra work X stipulated period/tendered cost), a bonus @ 1% (one per cent) of the tendered value per month computed on per day basis, shall be payable to the contractor, subject to a maximum limit of 5% (five per cent) of the tendered value.

The amount of bonus, if payable, shall be paid along with final bill after completion of work. Provided always that provision of the Clause 2A shall be applicable only when so provided in 'Schedule F'.

CLAUSE 3
When Contract can be Determined

Subject to other provisions contained in this clause, the Engineer-in-Charge may, without prejudice to his any other rights or remedy against the contractor in respect of any delay, inferior workmanship, any claims for damages and/or any other provisions of this contract or otherwise, and whether the date of completion has or has not elapsed, by notice in writing absolutely determine the contract in any of the following cases:

(i) If the contractor having been given by the Engineer-in-Charge a notice in writing to rectify, reconstruct or replace any defective work or that the work is being performed in an inefficient or otherwise improper or un-workman like manner shall omit to comply with the requirement of such notice for a period of seven days thereafter.

(ii) If the contractor has, without reasonable cause, suspended the progress of the work or has failed to proceed with the work with due diligence so that in the opinion of the Engineer-in-Charge (which shall be final and binding) he will be unable to secure completion of the work by the date for completion and continues to do so after a notice in writing of seven days from the Engineer-in-Charge.

(iii) If the contractor fails to complete the work within the stipulated date or items of work with individual date of completion, if any stipulated, on or before such date(s) of completion and does not complete them within the period specified in a notice given in writing in that behalf by the Engineer-in-Charge.

(iv) If the contractor fails to complete the work within the stipulated date or items of work with individual date of completion, if any stipulated, on or before such date(s) of completion and does not complete them within the period specified in a notice given in writing in that behalf by the Engineer-in-Charge.

(v) If the contractor persistently neglects to carry out his obligations under the contract and/ or commits default in complying with any of the terms and conditions of the contract and does not remedy it or take effective steps to remedy it within 7 days after a notice in writing is given to him in that behalf by the Engineer-in-Charge.

(vi) If the contractor shall offer or give or agree to give to any person in Government service or to any other person on his behalf any gift or consideration of any kind as an inducement or reward for doing or forbearing to do or for having done or forborne to do any act in relation to the obtaining or execution of this or any other contract for Government.

(vii) If the contractor shall enter into a contract with Government in connection with which commission has been paid or agreed to be paid by him or to his knowledge, unless the particulars of any such commission and the terms of payment thereof have been previously disclosed in writing to the Engineer-in-Charge.

(vii) If the contractor had secured the contract with Government as a result of wrong tendering or other non-bonafide methods of competitive tendering or commits breach of Integrity Agreement.

(viii) If the contractor being an individual, or if a firm, any partner thereof shall at any time be adjudged insolvent or have a receiving order or order

for administration of his estate made against him or shall take any proceedings for liquidation or composition (other than a voluntary liquidation for the purpose of amalgamation or reconstruction) under any Insolvency Act for the time being in force or make any conveyance or assignment of his effects or composition or arrangement for the benefit of his creditors or purport so to do, or if any application be made under any Insolvency Act for the time being in force for the sequestration of his estate or if a trust deed be executed by him for benefit of his creditors.

(ix) If the contractor being a company shall pass a resolution or the court shall make an order that the company shall be wound up or if a receiver or a manager on behalf of a creditor shall be appointed or if circumstances shall arise which entitle the court or the creditor to appoint a receiver or a manager or which entitle the court to make a winding up order.

(x) If the contractor shall suffer an execution being levied on his goods and allow it to be continued for a period of 21 days.

(xi) If the contractor assigns, transfers, sublets (engagement of labour on a piece-work basis or of labour with materials not to be incorporated in the work, shall not be deemed to be subletting) or otherwise parts with or attempts to assign, transfer, sublet or otherwise parts with the entire works or any portion thereof without the prior written approval of the Engineer -in-Charge.

When the contractor has made himself liable for action under any of the cases aforesaid, the

Engineer-in-Charge on behalf of the Director, IIM Indoreshall have powers:

(a) To determine the contract as aforesaid (of which termination notice in writing to the contractor under the hand of the Engineer-in-Charge shall be conclusive evidence). Upon such determination, the Security Deposit already recovered and Performance Guarantee under the contract shall be liable to be forfeited and shall be absolutely at the disposal of the Government

(b) After giving notice to the contractor to measure up the work of the contractor and to take such whole, or the balance or part thereof, as shall be un-executed out of his hands and to give it to another contractor to complete the work. The contractor, whose contract is determined as above, shall not be allowed to participate in the tendering process for the balance work.

In the event of above courses being adopted by the Engineer-in-Charge, the contractor shall have no claim to compensation for any loss sustained by him by reasons of his having purchased or procured any materials or entered into any engagements or made any advances on account or with a view to the execution of the work or the performance of the contract. And in case action is taken under any of the provision aforesaid, the contractor shall not be entitled to recover or be paid any sum for any work thereof or actually performed under this contract unless and until the Engineer-in-Charge has certified in writing the performance of such work and the value payable in respect thereof and he shall only be entitled to be paid the value so certified.

CLAUSE 3A

In case, the work cannot be started due to reasons not within the control of the contractor within 1/8th of the stipulated time for completion of work or one month whichever is higher, either party may close the contract. In case contractor wants to

close the contract, he shall give notice to the department stating the failure on the part of department. In such eventuality, the Performance Guarantee of the contractor shall be refunded within following time limits :

(i) If the Tendered value of work is up to Rs. 45 lac : 15 days.

(ii) If the Tendered value of work is more than Rs. 45 lac and up to Rs. 2.5 Crore : 21 days.

(iii) If the Tendered value of work exceeds Rs. 2.5 Crore : 30 days.

If Performance Guarantee is not released within prescribed time limit, then a simple interest @ 0.25% per month shall be payable on Performance Guarantee amount to the contractor from the date of expiry of prescribed time limit.

A compensation for such eventuality, on account of damages etc. shall be payable @ 0.25% of tendered amount subject to maximum limit of Rs. 10 lacs.

CLAUSE 4

Contractor liable to pay Compensation even if action not taken under Clause 3

In any case in which any of the powers conferred upon the Engineer-in-Charge by Clause-3 thereof, shall have become exercisable and the same are not exercised, the non-exercise thereof shall not constitute a waiver of any of the conditions hereof and such powers shall notwithstanding be exercisable in the event of any future case of default by the contractor and the liability of the contractor for compensation shall remain unaffected. In the event of the Engineer-in-Charge putting in force all or any of the powers vested in him under the preceding clause he may, if he so desires after giving a notice in writing to the contractor, take possession of (or at the sole discretion of the Engineer-in-Charge which shall be final and binding on the contractor) use as on hire (the amount of the hire money being also in the final determination of the Engineer-in-Charge) all or any tools, plant, materials and stores, in or upon the works, or the site thereof belonging to the contractor, or procured by the contractor and intended to be used for the execution of the work/or any part thereof, paying or allowing for the same in account at the contract rates, or, in the case of these not being applicable, at current market rates to be certified by the Engineer-in-Charge, whose certificate thereof shall be final, and binding on the contractor, clerk of the works, foreman or other authorized agent to remove such tools, plant, materials, or stores from the premises (within a time to be specified in such notice) in the event of the contractor failing to comply with any such requisition, the Engineer-in-Charge may remove them at the contractor's expense or sell them by auction or private sale on account of the contractor and his risk in all respects and the certificate of the Engineer-in-Charge as to the expenses of any such removal and the amount of the proceeds and expenses of any such sale shall be final and conclusive against the contractor

CLAUSE 5

Time and Extension for Delay

The time allowed for execution of the Works as specified in the Schedule 'F' or the extended time in accordance with these conditions shall be the essence of the Contract. The execution of the works shall commence from such time period as mentioned in schedule 'F' or from the date of handing over of the site whichever is later. If the Contractor commits default in commencing the execution of the work as

aforesaid, Government shall without prejudice to any other right or remedy available in law, be at liberty to forfeit the performance guarantee absolutely

5.1 As soon as possible after the Contract is concluded, the Contractor shall submit a Time and Progress Chart for each mile stone and get it approved by the Department. The Chart shall be prepared in direct relation to the time stated in the Contract documents for completion of items of the works. It shall indicate the forecast of the dates of commencement and completion of various trades of sections of the work and may be amended as necessary by agreement between the Engineer-in-Charge and the Contractor within the limitations of time imposed in the Contract documents, and further to ensure good progress during the execution of the work, the contractor shall in all cases in which the time allowed for any work, exceeds one month (save for special jobs for which a separate programme has been agreed upon) complete the work as per mile stones given in Schedule 'F'.

(a) Project Management shall be done by using project management software for works costing more than Rs. 5 Crore.

(b) The project management shall be done using M.S. Project software for works costing more than Rs. 5 Crore and up to Rs. 20 Crore.

For works costing more than Rs. 20 Crore, project management shall be done using Primavera Software.

PROGRAMME CHART

(i) The Contractor shall prepare an integrated programme chart in MS Project/Primavera software for the execution of work, showing clearly all activities from the start of work to completion, with details of manpower, equipment and machinery required for the fulfillment of the programme within the stipulated period or earlier and submit the same for approval to the Engineer-in- Charge within ten days of award of the contract. A recovery of Rs.2500/- (for works costing upto Rs. 20 Crores) / Rs. 5000/- (for works costing more than Rs. 20 Crores) shall be made on per day basis in case of delay in submission of the above programme.

(ii) The programme chart should include the following:

(a) Descriptive note explaining sequence of the various activities.

(b) Network (PERT / CPM / BAR CHART).

(c) Programme for procurement of materials by the contractor.

Programme of procurement of machinery / equipments having adequate capacity, commensurate with the quantum of work to be done within the stipulated period, by the contractor. In addition to above, to achieve the progress of Work as per programme, the contractor must bring at site adequate shuttering material required for cement concrete and R.C.C. works etc. for three floors within one month from the date of start of work till the completion of RCC work as per requirement of work. The contractor shall submit shuttering schedule adequate to complete structure work within laid down physical milestone.

(iii) If at any time, it appears to the Engineer-in-Charge that the actual progress of work does not conform to the approved programme referred above or after rescheduling of milestones, the contractor shall produce a revised programme within 7 (seven) days, showing the modifications to the approved programme to ensure timely completion of the work. The modified schedule of programme shall be approved by the Engineer in Charge. A recovery of Rs. 2500/- (for works costing upto Rs. 20 Crores) / Rs. 5000/- (for works costing more than Rs. 20 Crores) shall be made on per day basis in case of delay in submission of the modified programme.

(iv) The submission for approval by the Engineer-in-Charge of such programme or such particulars shall not relieve the contractor of any of the duties or responsibilities under the contract. This is without prejudice to the right of Engineer-in-Charge to take action against the contractor as per terms and conditions of the agreement.

(v) The contractor shall submit the progress report using MS Project/Primavira software with base line programme referred above for the work done during previous month to the Engineer-in-charge on or before 5th day of each month failing which a recovery Rs. 2500/-(for works costing upto Rs. 20 Crores) / Rs. 5000/- (for works costing more than Rs. 20 Crores) shall be made on per day basis in case of delay in submission of the monthly progress report.

5.2 If the work(s) be delayed by:-

(i) force majeure, or
(ii) abnormally bad weather, or
(iii) serious loss or damage by fire, or
(iv) civil commotion, local commotion of workmen, strike or lockout, affecting any of the trades employed on the work, or
(v) delay on the part of other contractors or tradesmen engaged by Engineer-in-Charge in executing work not forming part of the Contract, or
(vi) non-availability of stores, which are the responsibility of Government to supply or non-availability or break down of tools and Plant to be supplied or supplied by Government or
(vii) any other cause which, in the absolute discretion of the Engineer-in-Charge is beyond the Contractor's control.

then upon the happening of any such event causing delay, the Contractor shall immediately give notice thereof in writing to the authority as indicated in Schedule 'F' but shall nevertheless use constantly his best endeavours to prevent or make good the delay and shall do all that may be reasonably required to the satisfaction of the Engineer-in-Charge to proceed with the works.

5.3 Request for rescheduling of Mile stones and extension of time, to be eligible for consideration, shall be made by the Contractor in writing within fourteen days of the happening of the event causing delay on the prescribed form to the authority as indicated in Schedule 'F'. The Contractor may also, if practicable, indicate in such a request the period for which extension is desired.

5.4 In any such case the authority as indicated in Schedule 'F' may give a fair and reasonable extension of time and reschedule the mile stones for completion of work. Such extension or rescheduling of the milestones shall be communicated to the Contractor by the authority as indicated in Schedule 'F' in writing, within 3 months or 4 weeks of the date of receipt of such request respectively. Non application by the contractor for extension of time/ rescheduling of the milestones shall not be a bar for giving a fair and reasonable extension/ rescheduling of the milestones by the authority as indicated in Schedule 'F' and this shall be binding on the contractor.

CLAUSE 6
Measurements of work Done

Engineer-in-Charge shall, except as otherwise provided, ascertain and determine by measurement, the value in accordance with the contract of work done.

All measurement of all items having financial value shall be entered in Measurement Book and/or level field book so that a complete record is obtained of all works performed under the contract.
All measurements and levels shall be taken jointly by the Engineer-in-Charge or his authorized representative and by the contractor or his authorized representative from time to time during the progress of the work and such measurements shall be signed and dated by the Engineer in-Charge and the contractor or their representatives in token of their acceptance. If the contractor objects to any of the measurements recorded, a note shall be made to that effect with reason and signed by both the parties.

If for any reason the contractor or his authorized representative is not available and the work of recording measurements is suspended by the Engineer-in-Charge or his representative, the Engineer-in-Charge and the Department shall not entertain any claim from contractor for any loss or damages on this account. If the contractor or his authorized representative does not remain present at the time of such measurements after the contractor or his authorized representative has been given a notice in writing three (3) days in advance or fails to countersign or to record objection within a week from the date of the measurement, then such measurements recorded in his absence by the Engineer-in-Charge or his representative shall be deemed to be accepted by the Contractor.

The contractor shall, without extra charge, provide all assistance with every appliance, labour and other things necessary for measurements and recording levels.

Except where any general or detailed description of the work expressly shows to the contrary, measurements shall be taken in accordance with the procedure set forth in the specifications notwithstanding any provision in the relevant Standard Method of measurement or any general or local custom. In the case of items which are not covered by specifications, measurements shall be taken in accordance with the relevant standard method of measurement issued by the Bureau of Indian Standards and if for any item no such standard is available, then a mutually agreed method shall be followed.

The contractor shall give, not less than seven days' notice to the Engineer-in-Charge or his authorized representative in charge of the work, before covering up or otherwise placing beyond the reach of measurement any work in order that the same may be measured and correct dimensions thereof be taken before the same is covered up or placed beyond the reach of measurement and shall not cover up and place beyond reach of measurement any work without consent in writing of the Engineer-in-Charge or his authorized representative in charge of the work who shall within the aforesaid period of seven days inspect the work, and if any work shall be covered up or placed beyond the reach of measurements without such notice having been given or the Engineer-in-Charge's consent being obtained in writing, the same shall be uncovered at the Contractor's expense, or in default thereof no payment or allowance shall be made for such work or the materials with which the same was executed.

Engineer-in-Charge or his authorized representative may cause either themselves or through another officer of the department to check the measurements recorded jointly or otherwise as aforesaid and all provisions stipulated herein above shall be applicable to such checking of measurements or levels.

It is also a term of this contract that recording of measurements of any item of work in the measurement book and/or its payment in the interim, on account or final bill shall not be considered as conclusive evidence as to the sufficiency of any work or material to which it relates nor shall it relieve the contractor from liabilities from any over measurement or defects noticed till completion of the defects liability period.

CLAUSE 6A
Computerized Measurement Book
Engineer-in-Charge shall, except as otherwise provided, ascertain and determine by measurement the value of work done in accordance with the contract.

All measurements of all items having financial value shall be entered by the contractor and compiled in the shape of the Computerized Measurement Book having pages of A-4 size as per the format of the department so that a complete record is obtained of all the items of works performed under the contract.

All such measurements and levels recorded by the contractor or his authorized representative from time to time, during the progress of the work, shall be got checked by the contractor from the Engineer-in-Charge or his authorized representative as per interval or program fixed in consultation with Engineer-in-Charge or his authorized representative. After the necessary corrections made by the Engineer-in-Charge, the measurement sheets shall be returned to the contractor for incorporating the corrections and for resubmission to the Engineer-in-Charge for the dated signatures by the Engineer-in- Charge and the contractor or their representatives in token of their acceptance.

Whenever bill is due for payment, the contractor would initially submit draft computerized measurement sheets and these measurements would be got checked/test checked from the Engineer-in-Charge and/or his authorized representative. The contractor will, thereafter, incorporate such changes as may be done during these checks/test checks in his draft computerized measurements, and submit to the department a computerized measurement book, duly bound, and with its pages machine numbered. The Engineer-in- Charge and/or his authorized representative would thereafter check this MB, and record the necessary certificates for their checks/test checks.

The final, fair, computerized measurement book given by the contractor, duly bound, with its pages machine numbered, should be 100% correct, and no cutting or over-writing in the measurements would thereafter be allowed. If at all any error is noticed, the contractor shall have to submit a fresh computerized MB with its pages duly machine numbered and bound, after getting the earlier MB cancelled by the department. Thereafter, the MB shall be taken in the Divisional Office records, and allotted a number as per the Register of Computerised MBs. This should be done before the corresponding bill is submitted to the Division Office for payment. The contractor shall submit two spare copies of such computerized MB's for the purpose of reference and record by the various officers of the department.

The contractor shall also submit to the department separately his computerized Abstract of Cost and the bill based on these measurements, duly bound, and its pages machine numbered along with two spare copies of the "bill. Thereafter, this bill will be processed by the Division Office and allotted a number as per the computerized record in the same way as done for the measurement book meant for measurements.

The contractor shall, without extra charge, provide all assistance with every appliance, labour and other things necessary for checking of measurements/levels by the Engineer-in- Charge or his representative.

Except where any general or detailed description of the work expressly shows to the contrary, measurements shall be taken in accordance with the procedure set forth in the specifications notwithstanding any provision in the relevant Standard Method of measurement or any general or local custom. In the case of items which are not covered by specifications, measurements shall be taken in accordance with the relevant standard method of measurement issued by the Bureau of Indian Standards and if for any item no such standard is available then a mutually agreed method shall be followed.

The contractor shall give not less than seven days' notice to the Engineer-in-Charge or his authorized representative in charge of the work before covering up or otherwise placing beyond the reach of checking and/or test checking the measurement of any work in order that the same may be checked and/or test checked and correct dimensions thereof be taken before the same is covered up or placed beyond the reach of checking and/or test checking measurement and shall not cover up and place beyond reach of measurement any work without consent in writing of the Engineer-in-Charge or his authorized representative in charge of the work who shall within the aforesaid period of seven days inspect the work, and if any work shall be covered up or placed beyond the reach of hecking and/or test checking measurements without such notice having been given or the Engineer-in-Charge's consent being obtained in writing the same shall be uncovered at the Contractor's expense, or in default thereof no payment or allowance shall be made for such work or the materials with which the same was executed.

Engineer-in-Charge or his authorized representative may cause either themselves or through another officer of the department to check the measurements recorded by contractor and all provisions stipulated herein above shall be applicable to such checking of measurements or levels.

It is also a term of this contract that checking and/or test checking the measurements of any item of work in the measurement book and/or its payment in the interim, on account of final bill shall not be considered as conclusive evidence as to the sufficiency of any work or material to which it relates nor shall it relieve the contractor from liabilities from any over measurement or defects noticed till completion of the defects liability period.

CLAUSE 7
Payment on Intermediate Certificate to be Regarded as Advances

No payment shall be made for work, estimated to cost Rs. Twenty thousand or less till after the whole of the work shall have been completed and certificate of completion given. For works estimated to cost over Rs. Twenty thousand, the interim or running account bills shall be submitted by the contractor for the work executed on the basis of such recorded measurements on the format of the Department in triplicate on or before the date of every month fixed for the same by the Engineer-in-Charge. The contractor shall not be entitled to be paid any such interim payment if the gross work done together with net payment/ adjustment of advances for material collected, if any, since the last such payment is less than the amount specified in

Schedule 'F', in which case the interim bill shall be prepared on the appointed date of the month after the requisite progress is achieved. Engineer-in-Charge shall arrange to have the bill verified by taking or causing to be taken, where necessary, the requisite measurements of the work. In the event of the failure of the contractor to submit the bills, Engineer-in-Charge shall prepare or cause to be prepared such bills in which event no claims whatsoever due to delays on payment including that of interest shall be payable to the contractor. Payment on account of amount admissible shall be made by the Engineer-In-charge certifying the sum to which the contractor is considered entitled by way of interim payment at such rates as decided by the Engineer-in-Charge. The amount admissible shall be paid by 10th working day after the day of presentation of the bill by the Contractor to the Engineer-in-Charge or his Asstt. Engineer together with the account of the material issued by the department, or dismantled materials, if any. In the case of works outside the headquarters of the Engineer- in-Charge, the period of ten working days will be extended to fifteen working days. In case of delay in payment of intermediate bills after 45 days of submission of bill by the contractor provided the bill submitted by the contractor found to be in order, a simple interest @ 7.5% per annum shall be paid to the contractor from the date of expiry of prescribed time limit which will be compounded on yearly basis.

All such interim payments shall be regarded as payment by way of advances against final payment only and shall not preclude the requiring of bad, unsound and imperfect or unskilled work to be rejected, removed, taken away and reconstructed or re-erected. Any certificate given by the Engineer-in-Charge relating to the work done or materials delivered forming part of such payment, may be modified or corrected by any subsequent such certificate(s) or by the final certificate and shall not by itself be conclusive evidence that any work or materials to which it relates is/are in accordance with the contract and specifications. Any such interim payment, or any part thereof shall not in any respect conclude, determine or affect in any way powers of the Engineer-in-Charge under the contract or any of such payments be treated as final settlement and adjustment of accounts or in any way vary or affect the contract.

Pending consideration of extension of date of completion, interim payments shall continue to be made as herein provided without prejudice to the right of the department to take action under the terms of this contract for delay in the completion of work, if the extension of date of completion is not granted by the competent authority.

The Engineer-in-Charge in his sole discretion on the basis of a certificate from the Asstt. Engineer to the effect that the work has been completed up to the level in question make interim advance payments without detailed measurements for work done (other than foundations, items to be covered under finishing items) up to lintel level (including sunshade etc.) and slab level, for each floor working out at 75% of the assessed value. The advance payments so allowed shall be adjusted in the subsequent interim bill by taking detailed measurements thereof.

Payments in composite Contracts

In case of composite tenders, running payment for the major component shall be made by EE of major discipline to the main contractor. Running payment for minor component shall be made by the Engineer-in-Charge of the discipline of minor component directly to the main contractor.

In case main contractor fails to make the payment to the contractor associated by him within 15 days of receipt of each running account payment, then on the written complaint of contractor associated for such minor component, Engineer in charge of minor component shall serve the show cause to the main contractor and if reply of main contractor either not received or found unsatisfactory, he may make the payment directly to the contractor associated for minor component as per the terms and conditions of the agreement drawn between main contractor and associate contractor fixed by him. Such payment made to the associate contractor shall be recovered by Engineer-in-charge of major or minor component from the next R/A/ final bill due to main contractor as the case may be.

CLAUSE 8
Completion Certificate and Completion Plans

Within ten days of the completion of the work, the contractor shall give notice of such completion to the Engineer-in-Charge and within thirty days of the receipt of such notice, the Engineer-in-Charge shall inspect the work and if there is no defect in the work, shall furnish the contractor with a final certificate of completion, otherwise a provisional certificate of physical completion indicating defects (a) to be rectified by the contractor and/or (b) for which payment will be made at reduced rates, shall be issued. But no final certificate of completion shall be issued, nor shall the work be considered to be complete until the contractor shall have removed from the premises on which the work shall be executed all scaffolding, surplus materials, rubbish and all huts and sanitary arrangements required for his/their work people on the site in connection with the execution of the works as shall have been erected or constructed by the contractor(s) and cleaned off the dirt from all wood work, doors, windows, walls, floor or other parts of the building, in, upon, or about which the work is to be executed or of which he may have had possession for the purpose of the execution; thereof, and not until the work shall have been measured by the Engineer-in-Charge. If the contractor shall fail to comply with the requirements of this Clause as to removal of scaffolding, surplus materials and rubbish and all huts and sanitary arrangements as aforesaid and cleaning off dirt on or before the date fixed for the completion of work, the Engineer-in-Charge may at the expense of the contractor remove such scaffolding, surplus materials and rubbish etc., and dispose of the same as he thinks fit and clean off such dirt as aforesaid, and the contractor shall have no claim in respect of scaffolding or surplus materials as aforesaid except for any sum actually realized by the sale thereof.

CLAUSE 8A
Contractor to Keep Site Clean
When the annual repairs and maintenance of works are carried out, the splashes and droppings from white washing, colour washing, painting etc., on walls, floor, windows, etc shall be removed and the surface cleaned simultaneously with the completion of these items of work in the individual rooms, quarters or premises etc. where the work is done: without waiting for the actual completion of all the other items of work in the contract. In case the contractor fails to comply with the requirements of this clause, the Engineer-in-Charge shall have the right to get this work done at the cost of the contractor either departmentally or through any other agency. Before taking such action, the Engineer-in-Charge shall give ten days notice in writing to the contractor.

CLAUSE 8B

Completion Plans to be Submitted by the Contractor

The contractor shall submit completion plan as required vide General Specifications for Electrical works (Part-I internal) 2005 and (Part-ll External) 1994 as applicable within thirty days of the completion of the work.

In case, the contractor fails to submit the completion plan as aforesaid, he shall be liable to pay a sum equivalent to 2.5% of the value of the work subject to a ceiling of Rs.15,000 (Rs. Fifteen thousand only) as may be fixed by the Chief Engineer concerned and in this respect the decision of the Chief Engineer shall be final and binding on the contractor.

The contractor shall submit completion plan for water, sewerage and drainage line plan within thirty days of the completion of the work.

In case, the contractor fails to submit the completion plan as aforesaid, , the department will get it done through other agency at his cost and actual expenses incurred plus Rs. 15,000/- for the same shall be recovered from the contractor.

CLAUSE 9

Payment of Final Bill

The final bill shall be submitted by the contractor in the same manner as specified in interim bills within three months of physical completion of the work or within one month of the date of the final certificate of completion furnished by the Engineer-in-Charge whichever is earlier. No further claims shall be made by the contractor after submission of the final bill and these shall be deemed to have been waived and extinguished. Payments of those items of the bill in respect of which there is no dispute and of items in dispute, for quantities and rates as approved by Engineer-in-Charge, will, as far as possible be made within the period specified hereinunder, the period being reckoned from the date of receipt of the bill by the Engineer-in-Charge or his authorized Asstt. Engineer, complete with account of materials issued by the Department and dismantled materials.

(i) If the Tendered value of work is up to Rs. 45 lac :
2 months

(ii) If the Tendered value of work is more than Rs.45 lac and up to Rs. 2.5 Crore :
3 months

(iii) If the Tendered value of work exceeds Rs. 2.5 Crore :
6 months

In case of delay in payment of final bills after prescribed time limit, a simple interest @ 7.5% per annum shall be paid to the contractor from the date of expiry of prescribed time limit which will be compounded on yearly basis, provided the final bill submitted by the contractor found to be in order.

CLAUSE 9A

Payment of Contractor's Bills to Banks

Payments due to the contractor may, if so desired by him, be made to his bank, registered financial, co-operative or thrift societies or recognized financial institutions instead of direct to him provided that the contractor furnishes to the Engineer-in-Charge (1) an authorization in the form of a legally valid document such as a power of attorney conferring authority on the bank; registered financial, co-operative or thrift societies or recognized financial institutions to receive payments and (2) his own acceptance of the correctness of the amount made out as being due to him by Government or his signature on the bill or other claim preferred against Government

before settlement by the Engineer-in-Charge of the account or claim by payment to the bank, registered financial, co-operative or thrift societies or recognized financial institutions. While the receipt given by such banks; registered financial, co-operative or thrift societies or recognized financial institutions shall constitute a full and sufficient discharge for the payment, the contractor shall whenever possible present his bills duly receipted and discharged through his bank, registered financial, co-operative or thrift societies or recognized financial institutions.

Nothing herein contained shall operate to create in favour of the bank; registered financial, co-operative or thrift societies or recognized financial institutions any rights or equities vis-a-vis the Director, IIM Indore.

CLAUSE 10
Materials supplied by Government-Deleted

CLAUSE 10A
Materials to be provided by the Contractor

The contractor shall, at his own expense, provide all materials, required for the works other than those which are stipulated to be supplied by the Government.

The contractor shall, at his own expense and without delay, supply to the Engineer-in- Charge samples of materials to be used on the work and shall get these approved in advance. All such materials to be provided by the Contractor shall be in conformity with the specifications laid down or referred to in the contract. The contractor shall, if requested by the Engineer-in-Charge furnish proof, to the satisfaction of the Engineer-in-Charge that the materials so comply. The Engineer-in-Charge shall within thirty days of supply of samples or within such further period as he may require intimate to the Contractor in writing whether samples are approved by him or not. If samples are not approved, the Contractor shall forthwith arrange to supply to the Engineer-in-Charge for his approval, fresh samples complying with the specifications laid down in the contract. When materials are required to be tested in accordance with specifications, approval of the Engineer-in-Charge shall be issued after the test results are received.

The Contractor shall at his risk and cost submit the samples of materials to be tested or analyzed and shall not make use of or incorporate in the work any materials represented by the samples until the required tests or analysis have been made and materials finally accepted by the Engineer-in-Charge. The Contractor shall not be eligible for any claim or compensation either arising out of any delay in the work or due to any corrective measures required to be taken on account of and as a result of testing of materials.

The contractor shall, at his risk and cost, make all arrangements and shall provide all facilities as the Engineer-in-Charge may require for collecting, and preparing the required number of samples for such tests at such time and to such place or places as may be directed by the Engineer-in-Charge and bear all charges and cost of testing unless specifically provided for otherwise elsewhere in the contract or specifications. The Engineer-in- Charge or his authorized representative shall at all times have access to the works and to all workshops and places where work is being prepared or from where materials, manufactured articles or machinery are being obtained for the works and the contractor shall afford every facility and every assistance in obtaining the right to such access.

The Engineer-in-Charge shall have full powers to require the removal from the premises of all materials which in his opinion are not in accordance with the specifications and in case of default, the Engineer-in-Charge shall be at liberty to employ at the expense of the contractor, other persons to remove the same without being answerable or accountable for any loss or damage that may happen or arise to such materials. The Engineer-in-Charge shall also have full powers to require other proper materials to be substituted thereof and in case of default, the Engineer-in-Charge may cause the same to be supplied and all costs which may attend such removal and substitution shall be borne by the Contractor.

The contractor shall at his own expense, provide a material testing lab at the site for conducting routine field tests. The lab shall be equipped at least with the testing equipment as specified in schedule F.

CLAUSE 10B
Secured Advance on Non-perishable Materials
(i) The contractor, on signing an indenture in the form to be specified by the Engineer-inCharge, shall be entitled to be paid during the progress of the execution of the work up to 90% of the assessed value of any materials which are in the opinion of the Engineer-in-Charge non-perishable, non-fragile and non-combustible and are in accordance with the contract and which have been brought on the site in connection therewith and are adequately stored and/or protected against damage by weather or other causes but which have not at the time of advance been incorporated in the works. When materials on account of which an advance has been made under this sub-clause are incorporated in the work, the amount of such advance shall be recovered/deducted from the next
payment made under any of the clause or clauses of this contract.

Such secured advance shall also be payable on other items of perishable nature, fragile and combustible with the approval of the Engineer-in-Charge provided the contractor provides a comprehensive insurance cover for the full cost of such materials. The decision of the Engineer- in-Charge shall be final and binding on the contractor in this matter. No secured advance, shall however, be paid on high-risk materials such as ordinary glass, sand, petrol, diesel etc.

Mobilisation Advance
(ii) Mobilization advance not exceeding 10% of the tendered value may be given, if requested by the contractor in writing within one month of the order to commence the work. Such advance shall be in two or more installments to be determined by the Engineer-in- Charge at his sole discretion. The first installment of such advance shall be released by the Engineer-in-charge to the contractor on a request made by the contractor to the Engineer-in-Charge in this behalf. The second and subsequent installments shall be released by the Engineer- in- Charge only after the contractor furnishes a proof of the satisfactory utilization of the earlier installment to the entire satisfaction of the Engineer-in-Charge.

Before any installment of advance is released, the contractor shall execute a Bank Guarantee Bond from Scheduled Bank for the amount equal to 110% of the amount of advance and valid for the contract period. This (Bank Guarantee from Scheduled Bank for the amount equal to 110% of the balance amount of advance) shall be kept renewed from time to time to cover the balance amount and likely period of

complete recovery Provided always that provision of Clause 10 B (ii) shall be applicable only when so provided in 'Schedule F'.

Plant Machinery & Shuttering Material Advance

(iii) An advance for plant, machinery & shuttering material required for the work and brought to site by the Contractor may be given if requested by the contractor in writing within one month of bringing such plant and machinery to site. Such advance shall be given on such plant and machinery which in the opineon of the Engineer-in-charge will add to the expeditious execution of work and improve the quality of work. The amount of advance shall be restricted to 5% percent of the tender value. In the case of new plant and equipment to be purchased for the work, the advance shall be restricted to 90% of the price of such new plant and equipment paid by the contractor for which the contractor shall produce evidence satisfactory to the Engineer-in-Charge. In the case of second hand and used plants and equipment, the amount of such advance shall be limited to 50% of the depreciated value of plant and equipment as may be decided by the Engineer-in-Charge. The contractor shall, if so required by the Engineer-in-Charge, submit the statement of value of such old plant and equipment duly approved by a Registered Valuer recognized by the Central Board of Direct Taxes under the Income- Tax Act, 1961. No such advance shall be paid on any plant and equipment of perishable nature and on any plant and equipment of a value less than Rs. 50,000/- Seventy five per cent of such amount of advance shall be paid after the plant & equipment is brought to site and balance twenty five percent on successfully commissioning the same.

Leasing of equipment shall be considered at par with purchase of equipment and shall be covered by tripartite agreement with the following:

1. Leasing company which gives certificate of agreeing to lease equipment to the contractor.
2. Engineer in Charge, and
3. The contractor.

This advance shall further be subject to the condition that such plant and equipment (a) are considered by the Engineer-in-Charge to be necessary for the works; (b) and are in working order and are maintained in working order; (c) hypothecated to the Government as specified by the Engineer-in-Charge before the payment of advance is released. The contractor shall not be permitted to remove from the site such hypothecated plant and equipment without the prior written permission of the Engineerin- Charge. The contractor shall be responsible for maintaining such plant and equipment in good working order during the entire period of hypothecation failing which such advance shall be entirely recovered in lump sum. For this purpose, steel scaffolding and form work shall be treated as plant and equipment.

The contractor shall insure the Plant and Machinery for which mobilization advance is sought and given, for a sum sufficient to provide for their replacement at site. Any amounts not recovered from the insurer will be borne by the contractor.

Interest & Recovery

(iv) The mobilization advance and plant and machinery advance in (ii) & (iii) above bear simple interest at the rate of 10 per cent per annum and shall be calculated from the date of payment to the date of recovery, both days inclusive, on the outstanding amount of advance. Recovery of such sums advanced shall be made by the deduction from the contractors bills commencing after first ten per cent of the gross value of the work is executed and paid, on pro-rata percentage basis to the

gross value of the work billed beyond 10% in such a way that the entire advance is recovered by the time eighty per cent of the gross value of the contract is executed and paid, together with interest due on the entire outstanding amount up to the date of recovery of the installment.

(v) If the circumstances are considered reasonable by the Engineer-in-Charge, the period mentioned in (ii) and (iii) for request by the contractor in writing for grant of mobilization advance and plant and equipment advance may be extended in the discretion of the Engineer-in-Charge.

CLAUSE 10C
Payment on Account of Increase in Prices/Wages due to Statutory Order(s)

If after submission of the tender, the price of any material incorporated in the works (excluding the materials covered under Clause 10CA and not being a material supplied from the Engineer-in-Charge's stores in accordance with Clause 10 thereof) and/or wages of labour increases as a direct result of the coming into force of any fresh law, or statutory rule or order (but not due to any changes of rate in sales tax/VAT, Central/State Excise/Custom Duty) beyond the prices/wages prevailing at the time of the last stipulated date of receipt of tenders including extensions, if any, for the work during contract period including the justified period extended under the provisions of clause 5 of the contract without any action under clause 2, then the amount of the contract shall accordingly be varied and provided further that any such increase shall be limited to the price/wages prevailing at the time of updated stipulated date of completion considering effect of extra work (extra time to be calculated on prorata basis only as cost of extra work x stipulated period/tendered amount).

If after submission of the tender, the price of any material incorporated in the works (excluding the materials covered under Clause 10CA and not being a material supplied from the Engineer-in-Charge's stores in accordance with Clause 10 thereof) and/or wages of labour as prevailing at the time of last stipulated date of receipt of tender including extensions, if any, is decreased as a direct result of the coming into force of any fresh law or statutory rules or order (but not due to any changes of rate in sales tax/VAT, Central/State Excise/Custom Duty), Government shall in respect of materials incorporated in the works (excluding the materials covered under Clause 10CA and not being material supplied from the Engineer-in-Charge's stores in accordance with Clause 10 hereof) and/or labour engaged on the execution of the work after the date of coming into force of such law statutory rule or order be entitled to deduct from the dues of the contractor, such amount as shall be equivalent to the difference between the prices of the materials and/or wages as prevailed at the time of the last stipulated date for receipt of tenders including extensions if any for the work and the prices of materials and/or wages of labour on the coming into force of such law, statutory rule or order. This will be applicable for the contract period including the justified period extended under the provisions of clause 5 of the contract without any action under clause 2.
Engineer-in-Charge may call books of account and other relevant documents from the contractor
to satisfy himself about reasonability of increase in prices of materials and wages.

The contractor shall, within a reasonable time of his becoming aware of any alteration in the price of any such materials and/or wages of labour, give notice thereof to the Engineer-in-Charge stating that the same is given pursuant to this

condition together with all information relating thereto which he may be in position to supply.

For this purpose, the labour component of the work executed during period under consideration shall be the percentage as specified in Schedule F, of the value of work done during that period and the increase/decrease in labour shall be considered on the minimum daily wages in rupees of any unskilled adult male mazdoor, fixed under any law, statutory rule or order.

CLAUSE 10 CA
Payment due to variation in prices of materials after receipt of tender

If after submission of the tender, the price of materials specified in Schedule F increases/ decreases beyond the base price(s) as indicated in Schedule F for the work, then the amount of the contract shall accordingly be varied and provided further that any such variations shall be effected for stipulated period of Contract including the justified period extended under the provisions of Clause 5 of the Contract without any action under Clause 2.

However for work done/during the justified period extended as above, it will be limited to indices prevailing at the time of updated stipulated date of completion considering the effect of extra work (extra time to be calculated on pro-rata basis only as cost of extra work x stipulated period/tendered cost).

The increase/decrease in prices of cement, steel reinforcement, structural steel and POL shall be determined by the Price indices issued by the Director General, CPWD. For other items provided in the Schedule 'F', this shall be determined by the All India Wholesale Price Indices of materials as published by Economic Advisor to Government of India, Ministry of Commerce and Industry. Base price for cement, steel reinforcement, structural steel and POL shall be as issued under the authority of Director General CPWD applicable for Delhi including Noida, Gurgaon, Faridabad & Ghaziabad and for other places as issued under the authority of Zonal Chief Engineer, CPWD and base price of other materials issued by concerned Zonal chief Engineer and as indicated in Schedule 'F'. In case, price index of a particular material is not issued by Ministry of Commerce and Industry, then the price index of nearest similar material as indicated in Schedule 'F' shall be followed.
The amount of the contract shall accordingly be varied for all such materials and will be worked out as per the formula given below for individual material:-
Adjustment for component of individual material

$$V = P \times Q \times \frac{C1-C1_0}{C1_0}$$

where,

V = Variation in materi i.e. increase or decrease in the amount of rupees to be paid or ered.
P = Base Price of mat s issued under authority of DG, CPWD or concerned Zonal Chi ineer and as indicated in Schedule "F".

For Projects and Origina s
Q = Quantity of mater ught at site for bonafide use in the works since previous bill excluding any such quantity consumed in the deviated quantity of items beyond deviation limit and extra

/substituted item, paid/to be paid at rates derived on the basis of market rate under clause 12.2.

For Maintenance Works

Q = Quantity of material brought at site for bonafide use in the works since previous bill including any such quantity consumed in the deviated quantity of items beyond deviation limit paid at agreement rate and extra /substituted item being scheduled items, but excluding non schedule extra /substituted item paid/to be paid at market rate under clause 12.2.

CIo = Price index for cement, steel reinforcement bars structural steel and POL as issued by the DG, CPWD and corresponding to the time of base price of respective material indicated in Schedule 'F'. For other items, if any, provided in Schedule 'F', All India Wholesale Price Index for the material as published by the Economic Advisor to Government of India, Ministry of Industry and Commerce and corresponding to the time of base price of respective material indicated in Schedule 'F'.

CI = Price index for cement, steel reinforcement bars, structural steel and POL as issued under the authority of DG, CPWD for period under consideration. For other items, if any, provided in Schedule 'F', All India Wholesale Price Index for the material for period under consideration as published by Economic Advisor to Government of India, Ministry of Industry and Commerce.

Note: (i) In respect of the justified period extended under the provisions of clause 5 of the contract without any action under clause 2, the index prevailing at the time of updated stipulated date of completion considering the effect of extra work (extra time to be calculated on prorata basis only as cost of extra work x stipulated period/ tendered cost) shall be considered.

Provided always that provisions of the preceding Clause 10 C shall not be applicable in respect of Materials covered in this Clause.

(ii) If during progress of work or at the time of completion of work, it is noticed that any material brought at site is in excess of requirement, then amount of escalation if paid earlier on such excess quantity of material shall be recovered on the basis of cost indices as applied at the time of payment of escalation or as prevailing at the time of effecting recovery, whichever is higher.

(iii) Cement mentioned wherever in this clause includes Cement component used in RMC brought at site from outside approved RMC plants, if any.

(iv) The date wise record of ready mix concrete shall be kept in a register and the cement consumption for the same shall be calculated accordingly.

(v) If built-up steel items are brought at site from workshop, then the variation shall be paid for the structural steel up to the period when the built up item/finished product is brought at site.

CLAUSE 10 CC

Payment due to Increase/Decrease in Prices/Wages (excluding materials covered under clause 10 CA) after Receipt of Tender for Works

If the prices of materials (not being materials supplied or services rendered at fixed prices by the department in accordance with clause 10 & 34 thereof) and/or wages of labour required for execution of the work increase, the contractor shall be compensated for such increase as per provisions detailed below and the amount of the contract shall accordingly be varied, subject to the condition that that such compensation for escalation in prices and wages shall be available only for the work done during the stipulated period of the contract including the justified period extended under the provisions of clause 5 of the contract without any action under clause 2. However, for the work done during the justified period extended as above, the compensation as detailed below will be limited to prices/wages prevailing at the time of updated stipulated date of completion considering the effect of extra work (extra time to be calculated on pro-rata basis only as cost of extra work x stipulated period/tendered cost).No such compensation shall be payable for a work for which the stipulated period of completion is equal to or less than the time as specified in Schedule F. Such compensation for escalation in the prices of materials and labour, when due, shall be worked out based on the following provisions:-

(i) The base date for working out such escalation shall be the last stipulated date of receipt of tenders including extension, if any.

(ii) The cost of work on which escalation will be payable shall be reckoned as below :

(a) Gross value of work done up to this quarter : (A)
(b) Gross value of work done up to the last quarter : (B)
(c) Gross value of work done since previous quarter(A-B) ; (C)
(d) Full assessed value of Secured Advance (excluding materials Covered under Clause 10 CA) fresh paid in this quarter : (D)
(e) Full assessed value of Secured Advance (excluding materials Covered under Clause 10 CA) recovered in this quarter : (E)
(f) Full assessed value of Secured Advance for which escalation Payable in this quarter (D-E): (F)
(g) Advance payment made during this quarter: (G)
(h) Advance payment recovered during this quarter: (H)
(i) Advance payment for which escalation is payable in this Quarter(G-H): (I)
(j) Extra items/deviated quantities of items paid as per Clause 12 Based on prevailing market rates during this quarter: (J)

Then, M = C+F+I-J
N = 0.85 M

(k) Less cost of material supplied by the department as per Clause 10 and recovered during the quarter (K)
(l) Less cost of services rendered at fixed charges as per Clause 34 and recovered during the quarter (L)

Cost of work for which escalation is applicable:

$$W = N - (K + L)$$

(iii) Components for materials (except cement, reinforcement bars, structural steel, POL or other materials covered under clause 10 CA) labour, etc. shall be pre-determined for every work and incorporated in the conditions of contract attached to the tender papers included in Schedule 'F'. The decision

of the Engineer-in-Charge in working out such percentage shall be binding on the contractors.

(iv) The compensation for escalation for other materials (excluding cement, reinforcement bars, structural steel, POL or other materials covered under clause 10 CA) shall be worked as per the formula given below:-

(a) Adjustment for civil component (except cement, structural steel, reinforcement bars, POL and other materials covered under clause 10CA) / electrical component of construction 'Materials'

Vm = Variation in material cost i.e. increase or decrease in the amount in rupees to be paid or recovered.

W = Cost of Work done worked out as indicated in sub-para (ii) of Clause 10CC.

Xm = Component of 'materials' (except cement, structural steel, reinforcement bars POL and other materials covered under clause10CA) expressed as percent of the total value of work.

Ml = All India Wholesale Price Index for civil component/electrical component* of construction material as worked out on the basis of All India Wholesale Price Index for Individual Commodities/ Group Items for the period under consideration as published by Economic Advisor to Govt. of India, Ministry of Industry & Commerce and applying weightages to the Individual Commodities/Group Items. (In respect of the justified period extended under the provisions of clause 5 of the contract without any action under clause 2, the index prevailing at the time of updated stipulated date of completion considering the effect of extra work (extra time to be calculated on prorata basis only as cost of extra work x stipulated period/tendered cost, shall be considered.)

Mlo = All India Wholesale Price Index for civil component/electrical component* of construction material as worked out on the basis of All India Wholesale Price Index for Individual Commodities/Group Items valid on the last stipulated date of receipt of tender including extension, if any, as published by the Economic Advisor to Govt. of India, Ministry of Industry & Commerce and applying weightages to the Individual Commodities/Group items.

***Note**: relevant component only will be applicable.

(v) The following principles shall be followed while working out the indices mentioned in para (iv) above.

(a) The compensation for escalation shall be worked out at quarterly intervals and shall be with respect to the cost of work done as per bills paid during the three calendar months of the said quarter. The dates of preparation of bills as finally entered in the Measurement Book by the Assistant Engineer/ date of submission of bill finally by the contractor to the department in case of computerised measurement books shall be the guiding factor to decide the bills relevant to the quarterly interval. The first such payment shall be made at the end of three months after the month (excluding the month in which tender was accepted) and thereafter at three months' interval. At the time of completion of the work, the last period for payment might become less than 3 months, depending on the actual date of completion.

(b) The index (MI/FI etc.) relevant to any quarter/period for which such compensation is paid shall be the arithmetical average of the indices relevant to the three calendar months. If the period up to date of completion after the quarter covered by the last such installment of payment, is less than three months, the index Ml and Fl shall be the average of the indices for the months falling within that period.

(vi) The compensation for escalation for labour shall be worked out as per the formula given
below:-
VL : Variation in labour cost i.e. amount of increase or decrease in rupees to be paid or recovered.
W : Value of work done, worked out as indicated in sub-para (ii) above.
Y : Component of labour expressed as a percentage of the total value of the work.
LI : Minimum wage in rupees of an unskilled adult male mazdoor, fixed under any law, statutory rule or order as applicable on the last date of the quarter previous to the one under consideration. (In respect of the justified period extended under the provisions of clause 5 of the contract without
any action under clause 2, the minimum wage prevailing on the last date of quarter previous to the quarter pertaining to updated stipulated date of Completion considering the effect of extra work (extra time to be calculated on prorata basis only as cost of extra work x stipulated period/tendered
cost, shall be considered.)
Llo : Minimum daily wage in rupees of an unskilled adult male mazdoor, fixed under any law, statutory rule or order as on the last stipulated date of receipt of tender including extension, if any.

(vii) The following principles will be followed while working out the compensation as per subpara (vi) above.
(a) The minimum wage of an unskilled male mazdoor mentioned in sub-para (vi) above shall be the higher of the wage notified by Government of India, Ministry of Labour and that notified by the local administration both relevant to the place of work and the period of reckoning.
(b) The escalation for labour also shall be paid at the same quarterly intervals when escalation due to increase in cost of materials is paid under this clause. If such revision of minimum wages takes place during any such quarterly intervals, the escalation compensation shall be payable at revised rates only for work done in subsequent quarters;
(c) Irrespective of variations in minimum wages of any category of labour, for the purpose of this clause, the variation in the rate for an unskilled adult male mazdoor alone shall form the basis for working out the escalation compensation payable on the labour component.
(viii) In the event the price of materials and/or wages of labour required for execution of the work decrease/s, there shall be a downward adjustment of the cost of work so that such price of materials and/or wages of labour shall be deductible from the cost of work under this contract and in this regard the formula herein before stated under this Clause 10CC shall mutatis mutandis apply, provided that:
(a) no such adjustment for the decrease in the price of materials and/or wages of labour aforementioned would be made in case of contracts in which the stipulated period of completion of the work is equal to or less than the time as specified in Schedule 'F'.
(b) the Engineer-in-Charge shall otherwise be entitled to lay down the procedure by which the provision of this sub-clause shall be implemented from time to time and the decision of the Engineer-in-Charge in this behalf shall be final and binding on the contractor.

(ix) Provided always that:-
(a) Where provisions of clause 10CC are applicable, provisions of clause 10C will not be applicable but provisions of clause 10CA will be applicable.

(b) Where provisions of clause 10CC are not applicable, provisions of clause 10C and 10CA will become applicable.
Note: Updated stipulated date of completion (period of completion plus extra time for extra
work for compensation under clause 10C, 10CA and 10CC, the factor of 1.25 taken into
account for calculating the extra time under clause 12.1 for extra time shall not be considered while calculating the updated stipulated date of completion for this purpose
in clause 10C, clause 10CA, and clause 10CC.

CLAUSE 10 D
Dismantled Material Govt. Property
The contractor shall treat all materials obtained during dismantling of a structure, excavation of the site for a work, etc. as Government's property and such materials shall be disposed off to the best advantage of Government according to the instructions in writing issued by the Engineer-in-Charge.

CLAUSE 11
Work to be Executed in Accordance with Specifications, Drawings, Orders etc.
The contractor shall execute the whole and every part of the work in the most substantial and workmanlike manner both as regards materials and otherwise in every respect in strict accordance with the specifications. The contractor shall also conform exactly, fully and faithfully to the design, drawings and instructions in writing in respect of the work signed by the Engineer-in-Charge and the contractor shall be furnished free of charge one copy of the contract documents together with specifications, designs, drawings and instructions as are not included in the standard specifications of Central Public Works Department specified in Schedule 'F' or in any Bureau of Indian Standard or any other, published standard or code or, Schedule of Rates or any other printed publication referred to elsewhere in the contract.
The contractor shall comply with the provisions of the contract and with the care and diligence execute and maintain the works and provide all labour and materials, tools and plants including for measurements and supervision of all works, structural plans and other things of temporary or permanent nature required for such execution and maintenance in so far as the necessity for providing these, is specified or is reasonably inferred from the contract. The Contractor shall take full responsibility for adequacy, suitability and safety of all the works and methods of construction.

CLAUSE 12 :
Deviations/Variations Extent and Pricing
The Engineer-in-Charge shall have power (i) to make alteration in, omissions from, additions to, or substitutions for the original specifications, drawings, designs and instructions that may appear to him to be necessary or advisable during the progress of the work, and (ii) to omit a part of the works in case of non-availability of a portion of the site or for any other reasons and the contractor shall be bound to carry out the works in accordance with any instructions given to him in writing signed by the Engineer-in-Charge and such alterations, omissions, additions or substitutions shall form part of the contract as if originally provided therein and any altered, additional or substituted work which the contractor may be directed to do in the manner specified above as part of the works, shall be carried out by the contractor

on the same conditions in all respects including price on which he agreed to do the main work except as hereafter provided.

The completion cost of any agreement for Maintenance works including works of upgradation, aesthetic, special repair, addition/ alteration shall not exceed 1.25 times of Tendered amount.

12.1 The time for completion of the works shall, in the event of any deviations resulting in additional cost over the tendered value sum being ordered, be extended, if requested by the contractor, as follows :
(i) In the proportion which the additional cost of the altered, additional or substituted work, bears to the original tendered value plus
(ii) 25% of the time calculated in (i) above or such further additional time as may be considered reasonable by the Engineer-in-Charge.

12.2 A. For Project and original works:

Deviation, Extra Items and Pricing
In the case of extra item(s) (items that are completely new, and are in addition to the items contained in the contract), the contractor may within fifteen days of receipt of order or occurrence of the item(s) claim rates, supported by proper analysis, for the work and the engineer-in-charge shall within prescribed time limit of the receipt of the claims supported by analysis, after giving consideration to the analysis of the rates submitted by the contractor, determine the rates on the basis of the market rates and the contractor shall be paid in accordance with the rates so determined.

B. For Maintenance works including works of upgradation, aesthetic, special repair, addition/ alteration: In the case of Extra Item(s) being the schedule items (Delhi Schedule of Rates items), these shall be paid as per the schedule rate plus cost index (at the time of tender) plus/minus percentage above/ below quoted contract amount.

Payment of Extra items in case of non-schedule items (Non-DSR items) shall be made as per the prevailing market rate.

A. For Project and original works:

Deviation, Substituted Items, Pricing
In the case of substituted items (items that are taken up with partial substitution or in lieu of items of work in the contract), the rate for the agreement item (to be substituted) and substituted item shall also be determined in the manner as mentioned in the following para.

(a) If the market rate for the substituted item so determined is more than the market rate of the agreement item (to be substituted), the rate payable to the contractor for the substituted item shall be the rate for the agreement item (to be substituted) so increased to the extent of the difference between the market rates of substituted item and the agreement item (to be substituted).

(b) If the market rate for the substituted item so determined is less than the market rate of the agreement item (to be substituted), the rate payable to the contractor for the substituted item shall be the rate for the agreement item (to be substituted) so decreased to the extent of the difference between the market rates of substituted item and the agreement item (to be substituted).

B. For Maintenance works including works of upgradation, aesthetic, special repair, addition/ alteration: In the case of Substitute Item(s) being the schedule items (Delhi Schedule of Rates items), these shall be paid as per the schedule rate plus cost index (at the time of tender) plus/minus percentage above/ below quoted contract amount. Payment of Substitute in case of non-schedule items (Non-DSR items) shall be made as per the prevailing market rate.

Deviation, Deviated Quantities, Pricing

A. For Project and original works:

In the case of contract items, substituted items, contract cum substituted items, which exceed the limits laid down in schedule F, the contractor may within fifteen days of receipt of order or occurrence of the excess, claim revision of the rates, supported by proper analysis for the work in excess of the above mentioned limits, provided that if the rates so claimed are in excess of the rates specified in the schedule of quantities, the Engineer-in-Charge shall within prescribed time limit of receipt of the claims supported by analysis, after giving consideration to the analysis of the rates submitted by the contractor, determine the rates on the basis of the market rates and the contractor shall be paid in accordance with the rates so determined.

B. For Maintenance works including works of upgradation, aesthetic, special repair, addition/ alteration:

In the case of contract items, which exceed the limits laid down in schedule F, the contractor shall be paid rates specified in the schedule of quantities.

The prescribed time limits for finalising rates for Extra Item(s), Substitute Item(s) and Deviated Quantities of contract items are as under:

(i) If the Tendered value of work is up to Rs. 45 lac : 30 days.

(ii) If the Tendered value of work is more than Rs 45 lac and up to Rs. 2.5 Crore : 45 days.

(iii) If the Tendered value of work exceeds Rs. 2.5 Crore : 60 days.

12.3 **A. For Project and original works:**

The provisions of the preceding paragraph shall also apply to the decrease in the rates of items for the work in excess of the limits laid down in Schedule F, and the Engineer-in-Charge shall after giving notice to the contractor within one month of occurrence of the excess and after taking into consideration any reply received from him within fifteen days of the receipt of the notice, revise the rates for the work in question within one month of the expiry of the said period of fifteen days having regard to the market rates.

B. For Maintenance works including works of upgradation, aesthetic, special repair, addition/ alteration:

In case of decrease in the rates prevailing in the market of items for the work in excess of the limits laid down in Schedule F, the Engineer-in-Charge shall after giving notice to the contractor within one month of occurrence of the excess and after taking into consideration any reply received from him within fifteen days of the receipt of the notice, revise the rates for the work in question within one month of the expiry of the said period of fifteen days having regard to the market rates.

12.4 The contractor shall send to the Engineer-in-Charge once every three months, an up to date account giving complete details of all claims for additional payments to which the contractor may consider himself entitled and of all additional work ordered by the Engineer-in-Charge which he has executed during the preceding quarter failing which the contractor shall be deemed to have waived his right. However, the Chief Engineer may authorise consideration of such claims on merits.

12.5 For the purpose of operation of Schedule "F", the following works shall be treated as works relating to foundation unless & otherwise defined in the contract:
(i) For Buildings : All works up to 1.2 metres above ground level or up to floor 1 level whichever is lower.
(ii) For abutments, piers and well staining : All works up to 1.2 m above the bed level.
(iii) For retaining walls, wing walls, compound walls, chimneys, over head reservoirs/ tanks and other elevated structures : All works up to 1.2 metres above the ground level.
(iv) For reservoirs/tanks (other than overhead reservoirs/tanks) : All works up to 1.2 metres above the ground level.
(v) For basement: All works up to 1.2 m above ground level or up to floor 1 level whichever is lower.
(vi) For Roads, all items of excavation and filling including treatment of sub base.

12.6 Any operation incidental to or necessarily has to be in contemplation of tenderer while filing. tender, or necessary for proper execution of the item included in the Schedule of quantities or in the schedule of rates mentioned above, whether or not, specifically indicated in the description of the item and the relevant specifications, shall be deemed to be included in the rates quoted by the tenderer or the rate given in the said schedule of rates, as the case may be. Nothing extra shall be admissible for such operations.

CLAUSE 13
Foreclosure of contract due to Abandonment or Reduction in Scope of Work
If at any time after acceptance of the tender, Engineer-in-charge shall decide to abandon or reduce the scope of the works for any reason whatsoever and hence not require the whole or any part of the works to be carried out, the Engineer-in-Charge shall give notice in writing to that effect to the contractor and the contractor shall act accordingly in the matter. The contractor shall have no claim to any payment of compensation or otherwise whatsoever, on account of any profit or advantage which he might have derived from the execution of the works in full but which he did not derive in consequence of the foreclosure of the whole or part of the works.

The contractor shall be paid at contract rates, full amount for works executed at site and, in addition, a reasonable amount as certified by the Engineer-in-Charge for the items hereunder mentioned which could not be utilized on the work to the full extent in view of the foreclosure;
(i) Any expenditure incurred on preliminary site work, e.g. temporary access roads, temporary labour huts, staff quarters and site office; storage accommodation and water storage tanks.
(ii) Government shall have the option to take over contractor's materials or any part thereof either brought to site or of which the contractor is legally bound to accept delivery from suppliers (for incorporation in or incidental to the work) provided, however Government shall be bound to take over the materials or such portions thereof as the contractor does not desire to retain. For materials taken over or to be taken over by Government, cost of such materials as detailed by Engineer-in- Charge shall be paid. The cost shall, however, take into account purchase price, cost of transportation and deterioration or damage which may have been caused to materials whilst in the custody of the contractor.

(iii) If any materials supplied by Government are rendered surplus, the same except normal wastage shall be returned by the contractor to Government at rates not

exceeding those at which these were originally issued, less allowance for any deterioration or damage which may have been caused whilst the materials were in the custody of the contractor.
In addition, cost of transporting such materials from site to Government stores, if so required by Government, shall be paid.

(iv) Reasonable compensation for transfer of T & P from site to contractor's permanent stores or to his other works, whichever is less. If T & P are not transported to either of the said places, no cost of transportation shall be payable.

(v) Reasonable compensation for repatriation of contractor's site staff and imported labour to the extent necessary.

The contractor shall, if required by the Engineer- in-Charge, furnish to him, books of account, wage books, time sheets and other relevant documents and evidence as may be necessary to enable him to certify the reasonable amount payable under this condition.

The reasonable amount of items on (i), (iv) and (v) above shall not be in excess of 2% of the cost of the work remaining incomplete on the date of closure, i.e. total stipulated cost of the work as per accepted tender less the cost of work actually executed under the contract and less the cost of contractor's materials at site taken over by the Government as per item (ii) above. Provided always that against any payments due to the contractor on this account or otherwise, the Engineer-in-Charge shall be entitled to recover or be credited with any outstanding balances due from the contractor for advance paid in respect of any tool, plants and materials and any other sums which at the date of termination were recoverable by the Government from the contractor under the terms of the contract.

A compensation for such eventuality, on account of damages etc. shall be payable @ 0.5% of cost of work remaining incomplete on date of closure i.e. total stipulated cost of the work less the cost of work actually executed under the contract shall be payable.

Clause 14
Carrying out part work at risk & cost of contractor
If contractor:
(i) At any time makes default during currency of work or does not execute any part of the work with due diligence and continues to do so even after a notice in writing of 7 days in this respect from the Engineer-in-Charge; or
(ii) Commits default in complying with any of the terms and conditions of the contract and does not remedy it or takes effective steps to remedy it within 7 days even after a notice in writing is given in that behalf by the Engineer-in-Charge; or
Fails to complete the work(s) or items of work with individual dates of completion, on or before the date(s) so determined, and does not complete them within the period specified in the notice given in writing in that behalf by the Engineer-in-Charge.

The Engineer- in-Charge without invoking action under clause 3 may, without prejudice to any other right or remedy against the contractor which have either accrued or accrue thereafter to Government, by a notice in writing to take the part work / part incomplete work of any item(s) out of his hands and shall have powers to:

(a) Take possession of the site and any materials, constructional plant, implements, stores, etc., thereon; and/or

(b) Carry out the part work / part incomplete work of any item(s) by any means at the risk and cost of the contractor.

The Engineer-in-Charge shall determine the amount, if any, is recoverable from the contractor for completion of the part work/ part incomplete work of any item(s) taken out of his hands and execute at the risk and cost of the contractor, the liability of contractor on account of loss or damage suffered by Government because of action under this clause shall not exceed 10% of the tendered value of the work.

In determining the amount, credit shall be given to the contractor with the value of work done in all respect in the same manner and at the same rate as if it had been carried out by the original contractor under the terms of his contract, the value of contractor's materials taken over and incorporated in the work and use of plant and machinery belonging to the contractor. The certificate of the Engineer-in-Charge as to the value of work done shall be final and conclusive against the contractor provided always that action under this clause shall only be taken after giving notice in writing to the contractor. Provided also that if the expenses incurred by the department are less than the amount payable to the contractor at his agreement rates, the difference shall not be payable to the contractor.

Any excess expenditure incurred or to be incurred by Government in completing the part work/ part incomplete work of any item(s) or the excess loss of damages suffered or may be suffered by Government as aforesaid after allowing such credit shall without prejudice to any other right or remedy available to Government in law or per as agreement be recovered from any money due to the contractor on any account, and if such money is insufficient, the contractor shall be called upon in writing and shall be liable to pay the same within 30 days.

If the contractor fails to pay the required sum within the aforesaid period of 30 days, the Engineer-in-Charge shall have the right to sell any or all of the contractors' unused materials, constructional plant, implements, temporary building at site etc. and adjust the proceeds of sale thereof towards the dues recoverable from the contractor under the contract and if thereafter there remains any balance outstanding, it shall be recovered in accordance with the provisions of the contract.

In the event of above course being adopted by the Engineer-in-Charge, the contractor shall have no claim to compensation for any loss sustained by him by reason of his having purchased or procured any materials or entered into any engagements or made any advance on any account or with a view to the execution of the work or the performance of the contract.

CLAUSE 15
Suspension of Work

(i) The contractor shall, on receipt of the order in writing of the Engineer-in-Charge, (whose decision shall be final and binding on the contractor) suspend the progress of the works or any part thereof for such time and in such manner as the Engineer-in-Charge may consider necessary so as not to cause any damage or injury to the work already done or endanger the safety thereof for any of the following reasons:
(a) on account of any default on the part of the contractor or;

(b) for proper execution of the works or part thereof for reasons other than the default of the contractor; or
(c) for safety of the works or part thereof.
The contractor shall, during such suspension, properly protect and secure the works to the extent necessary and carry out the instructions given in that behalf by the Engineer-in- Charge.
(ii) If the suspension is ordered for reasons (b) and (c) in sub-para (i) above:
(a) the contractor shall be entitled to an extension of time equal to the period of every such suspension PLUS 25%, for completion of the item or group of items of work for which a separate period of completion is specified in the contract and of which the suspended work forms a part, and;

(b) If the total period of all such suspensions in respect of an item or group of items or work for which a separate period of completion is specified in the contract exceeds thirty days, the contractor shall, in addition, be entitled to such compensation as the Engineer-in- Charge may consider reasonable in respect of salaries and/or wages paid by the contractor to his employees and labour at site, remaining idle during the period of suspension, adding thereto 2% to cover indirect expenses of the contractor provided the contractor submits his claim supported by details to the Engineer-in-Charge within fifteen days of the expiry of the period of 30 days.

(iii) If the works or part thereof is suspended on the orders of the Engineer-in-Charge for more than three months at a time, except when suspension is ordered for reason (a) in subpara (i) above, the contractor may after receipt of such order serve a written notice on the Engineer-in-Charge requiring permission within fifteen days from receipt by the Engineerin-Charge of the said notice, to proceed with the work or part thereof in regard to which progress has been suspended and if such permission is not granted within that time, the contractor, if he intends to treat the suspension, where it affects only a part of the works as an omission of such part by Government or where it affects whole of the works, as an abandonment of the works by Government, shall within ten days of expiry of such period of 15 days give notice in writing of his intention to the Engineer-in-Charge. In the event of the contractor treating the suspension as an abandonment of the contract by Government, he shall have no claim to payment of any compensation on account of any profit or
advantage which he might have derived from the execution of the work in full but which he could not derive in consequence of the abandonment. He shall, however, be entitled to such compensation, as the Engineer-in-Charge may consider reasonable, in respect of salaries and/or wages paid by him to his employees and labour at site, remaining idle in consequence adding to the total thereof 2% to cover indirect expenses of the contractor provided the contractor submits his claim supported by details to the Engineer-in-Charge within 30 days of the expiry of the period of 3 months.

CLAUSE 15 A
Compensation in case of Delay of Supply of Material by Govt.-Deleted

This clause 15 A will not be applicable for works where no material is stipulated.

CLAUSE 16
Action in case Work not done as per Specifications
All works under or in course of execution or executed in pursuance of the contract, shall at all times be open and accessible to the inspection and supervision of the Engineer-lncharge, his authorized subordinates in charge of the work and all the

superior officers, officer of the Quality Assurance Unit of the Department or any organization engaged by the Department for Quality Assurance and of the Chief Technical Examiner's Office, and the contractor shall, at all times, during the usual working hours and at all other times at which reasonable notice of the visit of such officers has been given to the contractor, either himself be present to receive orders and instructions or have a responsible agent duly accredited in writing, present for that purpose. Orders given to the Contractor's agent shall be considered to have the same force as if they had been given to the contractor himself.

If it shall appear to the Engineer-in-charge or his authorized subordinates incharge of the work or to the Chief Engineer in charge of Quality Assurance or his subordinate officers or the officers of the organization engaged by the Department for Quality Assurance or to the Chief Technical Examiner or his subordinate officers, that any work has been executed with unsound, imperfect, or unskillful workmanship, or with materials or articles provided by him for the execution of the work which are unsound or of a quality inferior to that contracted or otherwise not in accordance with the contract, the contractor shall, on demand in writing which shall be made within twelve months (six months in the case of work costing Rs. 10 Lac and below except road work) of the completion of the work from the Engineer-in-Charge specifying the work, materials or articles complained of notwithstanding that the same may have been passed, certified and paid for forthwith rectify, or remove and reconstruct the work so specified in whole or in part, as the case may require or as the case may be, remove the materials or articles so specified and provide other proper and suitable materials or articles at his own charge and cost. In the event of the failing to do so within a period specified by the Engineer-in- Charge in his demand aforesaid, then the contractor shall be liable to pay compensation at the same rate as under clause 2 of the contract (for non-completion of the work in time) for this default.

In such case the Engineer-in-Charge may not accept the item of work at the rates applicable under the contract but may accept such items at reduced rates as the authority specified in schedule 'F' may consider reasonable during the preparation of on account bills or final bill if the item is so acceptable without detriment to the safety and utility of the item and the structure or he may reject the work outright without any payment and/or get it and other connected and incidental items rectified, or removed and re-executed at the risk and cost of the contractor. Decision of the Engineer-in-Charge to be conveyed in writing in respect of the same will be final and binding on the contractor

CLAUSE 17

Contractor Liable for Damages, defects during defect liability period

If the contractor or his working people or servants shall break, deface, injure or destroy any part of building in which they may be working, or any building, road, road kerb, fence, enclosure, water pipe, cables, drains, electric or telephone post or wires, trees, grass or grassland, or cultivated ground contiguous to the premises on which the work or any part is being executed, or if any damage shall happen to the work while in progress, from any cause whatever or if any defect, shrinkage or other faults appear in the work within twelve months (six months in the case of work costing Rs. Ten lacs and below except road work) after a certificate final or otherwise of its completion shall have been given by the Engineer-in-Charge as aforesaid arising out of defect or improper materials or workmanship the contractor shall upon receipt of a notice in writing on that behalf make the same good at his own expense or in default the Engineer-in-Charge cause the same to be made good

by other workmen and deduct the expense from any sums that may be due or at any time thereafter may become due to the contractor, or from his security deposit or the proceeds of sale thereof or of a sufficient portion thereof. The security deposit of the contractor shall not be refunded before the expiry of twelve months (six months in the case of work costing Rs. Ten lacs and below except road work) after the issue of the certificate final or otherwise, of completion of work, or till the final bill has been prepared and passed whichever is later. Provided that in the case of road work, if in the opinion of the Engineer-in-Charge, half of the security deposit is sufficient, to meet all liabilities of the contractor under this contract, half of the security deposit will be refundable after six months and the remaining half after twelve months of the issue of the said certificate of completion or till the final bill has been prepared and passed whichever is later.

In case of Maintenance and Operation works of E&M services, the security deposit deducted from contractors shall be refunded within one month from the date of final payment or within one month from the date of completion of the maintenance contract whichever is earlier.

CLAUSE 18
Contractor to Supply Tools & Plants etc.
The contractor shall provide at his own cost all materials (except such special materials, if any, as may in accordance with the contract be supplied from the Engineer-in-Charge's stores), machinery, tools & plants as specified in schedule F. In addition to this, appliances, implements, other plants, ladders, cordage, tackle, scaffolding and temporary works required for the proper execution of the work, whether original, altered or substituted and whether included in the specifications or other documents forming part of the contract or referred to in these conditions or not, or which may be necessary for the purpose of satisfying or complying with the requirements of the Engineer-in-Charge as to any matter as to which under these conditions he is entitled to be satisfied, or which he is entitled to require together with carriage therefore to and from the work. The contractor shall also supply without charge the requisite number of persons with the means and materials, necessary for the purpose of setting out works, and counting, weighing and assisting the measurement for examination at any time and from time to time of the work or materials. Failing his so doing, the same may be provided by the Engineer-in-Charge at the expense of the contractor and the expenses may be deducted, from any money due to the contractor, under this contract or otherwise and/or from his security deposit or the proceeds of sale thereof, or of a sufficient portions thereof.

CLAUSE 18 A
Recovery of Compensation paid to Workmen
In every case in which by virtue of the provisions sub-section (1) of Section 12, of the Workmen's Compensation Act, 1923, Government is obliged to pay compensation to a workman employed by the contractor, in execution of the works, Government will recover from the contractor, the amount of the compensation so paid; and, without prejudice to the rights of the Government under sub-section (2) of Section 12, of the said Act, Government shall be at liberty to recover such amount or any part thereof by deducting it from the security deposit or from any sum due by Government to the contractor whether under this contract or otherwise. Government shall not be bound to contest any claim made against it under sub-section (1) of Section 12, of the said Act, except on the written request of the contractor and upon his giving to Government full security for all costs for which Government might become liable in consequence of contesting such claim.

CLAUSE 18 B

Ensuring Payment and Amenities to Workers if Contractor fails

In every case in which by virtue of the provisions of the Contract Labour (Regulation and Abolition) Act, 1970, and of the Contract Labour (Regulation and Abolition) Central Rules, 1971, Government is obliged to pay any amounts of wages to a workman employed by the contractor in execution of the works, or to incur any expenditure in providing welfare and health amenities required to be provided under the above said Act and the rules under Clause 19H or under the C.P.W.D. Contractor's Labour Regulations, or under the Rules framed by Government from time to time for the protection of health and sanitary arrangements for workers employed by C.P.W.D. Contractors, Government will recover from the contractor, the amount of wages so paid or the amount of expenditure so incurred; and without prejudice to the rights of the Government under sub-section(2) of Section 20, and sub-section (4) of Section 21, of the Contract Labour (Regulation and Abolition) Act, 1970, Government shall be at liberty to recover such amount or any part thereof by deducting it from the security deposit or from any sum due by Government to the contractor whether under this contract or otherwise Government shall not be bound to contest any claim made against it under sub-section (1) of Section 20, sub-section (4) of Section 21, of the said Act, except on the written request of the contractor and upon his giving to the Government full security for all costs for which Government might become liable in contesting such claim.

CLAUSE 19

Labour Laws to be complied by the Contractor

The contractor shall obtain a valid licence under the Contract Labour (R&A) Act, 1970, and the Contract Labour (Regulation and Abolition) Central Rules, 1971, before the commencement of the work, and continue to have a valid license until the completion of the work. The contractor shall also abide by the provisions of the Child Labour (Prohibition and Regulation) Act, 1986.

The contractor shall also comply with the provisions of the building and other Construction Workers (Regulation of Employment & Conditions of Service) Act, 1996 and the building and other Construction Workers Welfare Cess Act, 1996.

Any failure to fulfil these requirements shall attract the penal provisions of this contract arising out of the resultant non-execution of the work.

CLAUSE 19A

No labour below the age of fourteen years shall be employed on the work.

CLAUSE 19 B

Payment of Wages

Payment of wages:

(i) The contractor shall pay to labour employed by him either directly or through subcontractors, wages not less than fair wages as defined in the C.P.W.D. Contractor's Labour Regulations or as per the provisions of the Contract Labour (Regulation and Abolition) Act, 1970 and the contract Labour (Regulation and Abolition) Central Rules, 1971, wherever applicable.

(ii) The contractor shall, notwithstanding the provisions of any contract to the contrary, cause to be paid fair wage to labour indirectly engaged on the work, including any labour engaged by his sub-contractors in connection with the said work, as if the labour had been immediately employed by him.

(iii) In respect of all labour directly or indirectly employed in the works for performance of the contractor's part of this contract, the contractor shall comply with or cause to be complied with the Central Public Works Department contractor's Labour Regulations made by Government from time to time in regard to payment of wages, wage period, deductions from wages recovery of wages not paid and deductions unauthorizedly made, maintenance of wage books or wage slips, publication of scale of wages and other terms of employment, inspection and submission of periodical returns and all other matters of the like nature or as per the provisions of the Contract Labour (Regulation and Abolition) Act, 1970, and the Contract Labour (Regulation and Abolition) Central Rules, 1971, wherever applicable.

(iv) (a) The Engineer-in-Charge concerned shall have the right to deduct from the moneys due to the contractor any sum required or estimated to be required for making good the loss suffered by a worker or workers by reason of non-fulfilment of the conditions of the contract for the benefit of the workers, non-payment of wages or of deductions made from his or their wages which are not justified by their terms of the contract or non-observance of the Regulations.

(b) Under the provision of Minimum Wages (Central) Rules, 1950, the contractor is bound to allow to the labours directly or indirectly employed in the works one day rest for 6 days continuous work and pay wages at the same rate as for duty. In the event of default, the Engineer-in-Charge shall have the right to deduct the sum or sums not paid on account of wages for weekly holidays to any labours and pay the same to the persons entitled thereto from any money due to the contractor by the Engineer-in-Charge concerned.

In the case of Union Territory of Delhi, however, as the all inclusive minimum daily wages fixed under Notification of the Delhi Administration No.F.12(162)MWO/DAB/43884-91, dated 31-12-1979 as amended from time to time are inclusive of wages for the weekly day of rest, the question of extra payment for weekly holiday would not arise.

(v) The contractor shall comply with the provisions of the Payment of Wages Act, 1936, Minimum Wages Act, 1948, Employees Liability Act, 1938, Workmen's Compensation Act, 1923, Industrial Disputes Act, 1947, Maternity Benefits Act, 1961, and the Contractor's Labour (Regulation and Abolition) Act 1970, or the modifications thereof or any other laws relating thereto and the rules made thereunder from time to time.

(vi) The contractor shall indemnify and keep indemnified Government against payments to be made under and for the observance of the laws aforesaid and the C.P.W.D. Contractor's Labour Regulations without prejudice to his right to claim indemnity from his sub-contractors.

(vii) The laws aforesaid shall be deemed to be a part of this contract and any breach thereof shall be deemed to be a breach of this contract.

(viii) Whatever is the minimum wage for the time being, or if the wage payable is higher than such wage, such wage shall be paid by the contractor to the workmen directly without the intervention of Jamadar and that Jamadar shall not be entitled to deduct or recover any amount from the minimum wage payable to the workmen as and by way of commission or otherwise.

(ix) The contractor shall ensure that no amount by way of commission or otherwise is deducted or recovered by the Jamadar from the wage of workmen.

CLAUSE 19C

In respect of all labour directly or indirectly employed in the work for the performance of the contractor's part of this contract, the contractor shall at his own expense arrange for the safety provisions as per C.P.W.D. Safety Code framed from time to time and shall at his own expense provide for all facilities in connection therewith. In case the contractor fails to make arrangement and provide necessary facilities as aforesaid, he shall be liable to pay a penalty of Rs.200/- for each default and in addition, the Engineer-in- Charge shall be at liberty to make arrangement and provide facilities as aforesaid and recover the costs incurred in that behalf from the contractor.

CLAUSE 19 D

The contractor shall submit by the 4th and 19th of every month, to the Engineer-in-Charge, a
true statement showing in respect of the second half of the preceding month and the first half
of the current month respectively:-
(1) the number of labourers employed by him on the work,
(2) their working yours,
(3) the wages paid to them,
(4) the accidents that occurred during the said fornight showing the circumstances under which they happened and the extent of damage and injury caused by them, and
(5) the number of female workers who have been allowed maternity benefit according to Clause 19F and the amount paid to them.

Failing which the contractor shall be liable to pay to Government, a sum not exceeding Rs.200/- for each default or materially incorrect statement. The decision of the Executive Engineer shall be final in deducting from any bill due to the contractor, the amount levied as fine and be binding on the contractor.

CLAUSE 19 E

In respect of all labour directly or indirectly employed in the works for the performance of the contractor's part of this contract, the contractor shall comply with or cause to be complied with all the rules framed by Government from time to time for the protection of health and sanitary arrangements for workers employed by the Central Public Works Department and its contractors.

CLAUSE 19 F

Leave and pay during leave shall be regulated as follows:-

1. Leave :
(i) in the case of delivery - maternity leave not exceeding 8 weeks, 4 weeks up to and including the day of delivery and 4 weeks following that day,
(ii) in the case of miscarriage - upto 3 weeks from the date of miscarriage.

2. Pay :
(i) in the case of delivery - leave pay during maternity leave will be at the rate of the women's average daily earnings, calculated on total wages earned on the days when full time work was done during a period of three months immediately preceding the date on which she gives notice that she expects to be confined or at the rate of Rupee one only a day whichever is greater.

(ii) in the case of miscarriage - leave pay at the rate of average daily earning calculated on the total wages earned on the days when full time work was done during a period of three months immediately preceding the date of such miscarriage.

3. Conditions for the grant of Maternity Leave:
No maternity leave benefit shall be admissible to a woman unless she has been employed for a total period of not less than six months immediately preceding the date on which she proceeds on leave.

4. The contractor shall maintain a register of Maternity (Benefit) in the Prescribed Form as shown in appendix -I and II, and the same shall be kept at the place of work.

CLAUSE 19 G

In the event of the contractor(s) committing a default or breach of any of the provisions of the Central Public Works Department, Contractor's Labour Regulations and Model Rules for the protection of health and sanitary arrangements for the workers as amended from time to time or furnishing any information or submitting or filing any statement under the provisions of the above Regulations and' Rules which is materially incorrect, he/they shall, without prejudice to any other liability, pay to the Government a sum not exceeding Rs.200/- for every default, breach or furnishing, making, submitting, filing such materially incorrect statements and in the event of the contractor(s) defaulting continuously in this respect, the penalty may be enhanced to Rs.200/- per day for each day of default subject to a maximum of 5 per cent of the estimated cost of the work put to tender. The decision of the Engineer-in-Charge shall be final and binding on the parties. Should it appear to the Engineer-in-Charge that the contractor(s) is/are not properly observing and complying with the provisions of the C.P.W.D. Contractor's Labour Regulations and Model Rules and the provisions of the Contract Labour (Regulation and Abolition) Act 1970, and the Contract Labour (R& A) Central Rules 1971, for the protection of health and sanitary arrangements for work-people employed by the contractor(s) (hereinafter referred as "the said Rules") the Engineer-in-Charge shall have power to give notice in writing to the contractor(s) requiring that the said Rules be complied with and the amenities prescribed therein be provided to the work-people within a reasonable time to be specified in the notice. If the contractor(s) shall fail within the period specified in the notice to comply with and/observe the said Rules and to provide the amenities to the work-people as aforesaid, the Engineer-in-Charge shall have the power to provide the amenities hereinbefore mentioned at the cost of the contractor(s). The contractor(s) shall erect, make and maintain at his/their own expense and to approved standards all necessary huts and sanitary arrangements required for his/their work-people on the site in connection with the execution of the works, and if the same shall not have been erected or constructed, according to approved standards, the Engineer-in-Charge shall have power to give notice in writing to the contractor(s) requiring that the said huts and sanitary arrangements be remodelled and/or reconstructed according to approved standards, and if the contractor(s) shall fail to remodel or reconstruct such huts and sanitary arrangements according to approved standards within the period specified in the notice, the Engineer-in-Charge shall have the power to remodel or reconstruct such huts and sanitary arrangements according to approved standards at the cost of the contractor(s).

CLAUSE 19 H

The contractor(s) shall at his/their own cost provide his/their labour with a sufficient number of huts (hereinafter referred to as the camp) of the following specifications on a suitable plot of land to be approved by the Engineer-in-Charge.
(i) (a) The minimum height of each hut at the eaves level shall be 2.10m (7 ft.) and the floor area to be provided will be at the rate of 2.7 sq.m. (30 sq.ft.) for each member of the worker's family staying with the labourer.

(b) The contractor(s) shall in addition construct suitable cooking places having a minimum area of 1.80m x 1.50m (6'x5') adjacent to the hut for each family.

(c) The contractor(s) shall also construct temporary latrines and urinals for the use of the labourers each on the scale of not less than four per each one hundred of the total strength, separate latrines and urinals being provided for women.

(d) The contractor(s) shall construct sufficient number of bathing and washing places, one unit for every 25 persons residing in the camp. These bathing and washing places shall be suitably screened.

(ii) (a) All the huts shall have walls of sun-dried or burnt-bricks laid in mud mortar or other suitable local materials as may be approved by the Engineer-in-Charge. In case of sun-dried bricks, the walls should be plastered with mud gobri on both sides. The floor may be kutcha but plastered with mud gobri and shall be at least 15 cm (6") above the surrounding ground. The roofs shall be laid with thatch or any other materials as may be approved by the Engineer-in-Charge and the contractor shall ensure that throughout the period of their occupation, the roofs remain water-tight.

(b) The contractor(s) shall provide each hut with proper ventilation.

(c) All doors, windows, and ventilators shall be provided with suitable leaves for security purposes.

(d) There shall be kept an open space of at least 7.2m (8 yards) between the rows of huts which may be reduced to 6m (20 ft.) according to the availability of site with the approval of the Engineer-in-Charge. Back to back construction will be allowed.

(iii) Water Supply - The contractor(s) shall provide adequate supply of water for the use of labourers. The provisions shall not be less than two gallons of pure and wholesome water per head per day for drinking purposes and three gallons of clean water per head per day for bathing and washing purposes. Where piped water supply is available, supply shall be at stand posts and where the supply is from wells or river, tanks which may be of metal or masonry, shall be provided. The contractor(s) shall also at his/ their own cost make arrangements for laying pipe lines for water supply to his/ their labour camp from the existing mains wherever available, and shall pay all fees and charges therefore.

(iv) The site selected for the camp shall be high ground, removed from jungle.

(v) Disposal of Excreta - The contractor(s) shall make necessary arrangements for the disposal of excreta from the latrines by trenching or incineration which shall be according to the requirements laid down by the Local Health Authorities. If trenching or incineration is not allowed, the contractor(s) shall make arrangements for the removal of the excreta through the Municipal Committee/authority and inform it about the number of labourers employed so that arrangements may be made by

such Committee/authority for the removal of the excreta. All charges on this account shall be borne by the contractor and paid direct by him to the Municipality/authority. The contractor shall provide one sweeper for every eight seats in case of dry system.

(vi) Drainage - The contractor(s) shall provide efficient arrangements for draining away sullage water so as to keep the camp neat and tidy.

(vii) The contractor(s) shall make necessary arrangements for keeping the camp area sufficiently lighted to avoid accidents to the workers.

(viii)Sanitation - The contractor(s) shall make arrangements for conservancy and sanitation in the labour camps according to the rules of the Local Public Health and Medical Authorities.

CLAUSE 19 I

The Engineer-in-Charge may require the contractor to dismiss or remove from the site of the work any person or persons in the contractors' employ upon the work who may be incompetent or misconduct himself and the contractor shall forthwith comply with such requirements. In respect of maintenance/repair or renovation works etc. where the labour have an easy access to the individual houses, the contractor shall issue identity cards to the labourers, whether temporary or permanent and he shall be responsible for any untoward action on the part of such labour. AE/JE will display a list of contractors working in the colony/Blocks on the notice board in the colony and also at the service centre, to apprise the residents about the same.

CLAUSE 19J

It shall be the responsibility of the contractor to see that the building under construction is not occupied by any body unauthorizedly during construction, and is handed over to the Engineer-in-Charge with vacant possession of complete building. If such building though completed is occupied illegally, then the Engineer-in-Charge shall have the option to refuse to accept the said building/buildings in that position. Any delay in acceptance on this account will be treated as the delay in completion and for such delay, a levy upto 5% of tendered value of work may be imposed by the Chief Engineer whose decision shall be final both with regard to the justification and quantum and be binding on the contractor.

However, the Chief Engineer, through a notice, may require the contractor to remove the illegal occupation any time on or before construction and delivery.

CLAUSE 19K
Employment of skilled/semi-skilled workers

The contractor shall, at all stages of work, deploy skilled/semi-skilled tradesmen who are qualified and possess certificate in particular trade from CPWD Training Institute/Industrial Training Institute/National Institute of construction Management and Research (NICMAR)/ National Academy of Construction, CIDC or any similar reputed and recognized Institute managed/ certified by State/Central Government. The number of such qualified tradesmen shall not be less than 20% of total skilled/semi skilled workers required in each trade at any stage of work. The contractor shall submit number of man days required in respect of each trade, its scheduling and the list of qualified tradesmen along with requisite certificate from recognized Institute to Engineer in charge for approval. Notwithstanding such approval, if the tradesmen are found to have inadequate skill to execute the work of

respective trade, the contractor shall substitute such tradesmen within two days of written notice from Engineer-in- Charge. Failure on the part of contractor to obtain approval of Engineer-in-Charge or failure to deploy qualified tradesmen will attract a compensation to be paid by contractor at the rate of Rs. 100 per such tradesman per day. Decision of Engineer in Charge as to whether particular tradesman possesses requisite skill and amount of compensation in case of default shall be final and binding.
Provided always, that the provisions of this clause, shall not be applicable for works with estimated cost put to tender being less than Rs. 5 crores.

CLAUSE 19L
Contribution of EPF and ESI
The ESI and EPF contributions on the part of employer in respect of this contract shall be paid
by the contractor. These contributions on the part of the employer paid by the contractor shall
be reimbursed by the Engineer-in-charge to the contractor on actual basis.

CLAUSE 20
Minimum Wages Act to be Complied With
The contractor shall comply with all the provisions of the Minimum Wages Act, 1948, and Contract Labour (Regulation and Abolition) Act, 1970, amended from time to time and rules framed thereunder and other labour laws affecting contract labour that may be brought into force from time to time.

CLAUSE 21
Work not to be sublet. Action in case of insolvency
The contract shall not be assigned or sublet without the written approval of the Engineer-in -Charge. And if the contractor shall assign or sublet his contract, or attempt to do so, or become insolvent or commence any insolvency proceedings or make any composition with his creditors or attempt to do so, or if any bribe, gratuity, gift, loan, perquisite, reward or advantage pecuniary or otherwise, shall either directly or indirectly, be given, promised or offered by the contractor, or any of his servants or agent to any public officer or person in the employ of Government in any way relating to his office or employment, or if any such officer or person shall become in any way directly or indirectly interested in the contract, the Engineer-in-Charge on behalf of the Director, IIM Indoreshall have power to adopt the course specified in Clause 3 hereof in the interest of Government and in the event of such course being adopted, the consequences specified in the said Clause 3 shall ensue.

CLAUSE 22
All sums payable by way of compensation under any of these conditions shall be considered as reasonable compensation to be applied to the use of Government without reference to the actual loss or damage sustained and whether or not any damage shall have been sustained.

CLAUSE 23
Changes in firm's Constitution to be Intimated
Where the contractor is a partnership firm, the previous approval in writing of the Engineer-in-Charge shall be obtained before any change is made in the constitution of the firm. Where the contractor is an individual or a Hindu undivided family business concern, such approval as aforesaid shall likewise be obtained before the contractor enters into any partnership agreement where under the partnership firm

would have the right to carry out the works hereby undertaken by the contractor. If previous approval as aforesaid is not obtained, the contract shall be deemed to have been assigned in contravention of Clause 21 hereof and the same action may be taken, and the same consequences shall ensue as provided in the said Clause 21.

CLAUSE 24

All works to be executed under the contract shall be executed under the direction and subject to the approval in all respects of the Engineer-in-Charge who shall be entitled to direct at what point or points and in what manner they are to be commenced, and from time to time carried on.

CLAUSE 25

Settlement of Disputes &Arbitration

Except where otherwise provided in the contract, all questions and disputes relating to the meaning of the specifications, design, drawings and instructions here-in before mentioned and as to the quality of workmanship or materials used on the work or as to any other question, claim, right, matter or thing whatsoever in any way arising out of or relating to the contract, designs, drawings, specifications, estimates, instructions, orders or these conditions or otherwise concerning the works or the execution or failure to execute the same whether arising during the progress of the work or after the cancellation, termination, completion or abandonment thereof shall be dealt with as mentioned hereinafter:

(i) If the contractor considers any work demanded of him to be outside the requirements of the contract, or disputes any drawings, record or decision given in writing by the Engineer-in-Charge

on any matter in connection with or arising out of the contract or carrying out of the work, to be unacceptable, he shall promptly within 15 days request the Chief Engineer in writing for written instruction or decision. Thereupon, the Chief Engineer shall give his written instructions or decision within a period of one month from the receipt of the contractor's letter.

If the Chief Engineer fails to give his instructions or decision in writing within the aforesaid period or if the contractor is dissatisfied with the instructions or decision of the Chief Engineer, the contractor may, within 15 days of the receipt of Chief Engineer's decision, appeal to the Director, IIM Indore who shall afford an opportunity to the contractor to be heard, if the latter so desires, and to offer evidence in support of his appeal. The Director, Iim Indore shall give his decision within 30 days of receipt of contractor's appeal. If the contractor is dissatisfied with the decision of the Director, IIM Indore, the contractor may within 30 days from the receipt of the Director, IIM Indore decision, appeal before the Dispute Redressal Committee (DRC) along with a list of disputes with amounts claimed in respect of each such dispute and giving reference to the rejection of his disputes by the Director, IIM Indore. The Dispute Redressal Committee (DRC) shall give his decision within a period of 90 days from the receipt of Contractor's appeal. The constitution of Dispute Redressal Committee (DRC) shall be as indicated in Schedule 'F'. If the Dispute Redressal Committee (DRC) fails to give his decision within the aforesaid period or any party is dissatisfied with the decision of Dispute Redressal Committee (DRC), then either party may within a period of 30 days from the receipt of the decision of Dispute Redressal Committee (DRC), give notice to the Director IIM Indore for appointment of arbitrator on prescribed proforma as per Appendix XV, failing which the said decision shall be final binding and conclusive and not referable to adjudication by the arbitrator.

It is a term of contract that each party invoking arbitration must exhaust the aforesaid mechanism of settlement of claims/disputes prior to invoking arbitration.

(ii) Except where the decision has become final, binding and conclusive in terms of Sub Para (i) above, disputes or difference shall be referred for adjudication through arbitration by a sole arbitrator appointed by the Director IIM Indore. If the arbitrator so appointed is unable or unwilling to act or resigns his appointment or vacates his office due to any reason whatsoever, another sole arbitrator shall be appointed in the manner aforesaid. Such person shall be entitled to proceed with the reference from the stage at which it was left by his predecessor.

It is a term of this contract that the party invoking arbitration shall give a list of disputes with amounts claimed in respect of each such dispute along with the notice for appointment of arbitrator and giving reference to the rejection by the Chief Engineer of the appeal.

It is also a term of this contract that no person, other than a person appointed by such Director IIM Indore, as aforesaid, should act as arbitrator and if for any reason that is not possible, the matter shall not be referred to arbitration at all.

It is also a term of this contract that if the contractor does not make any demand for appointment of arbitrator in respect of any claims in writing as aforesaid within 120 days of receiving the intimation from the Engineer-in-charge that the final bill is ready for payment, the claim of the contractor shall be deemed to have been waived and absolutely barred and the Government shall be discharged and released of all liabilities under the contract in respect of these claims.

The arbitration shall be conducted in accordance with the provisions of the Arbitration and Conciliation Act, 1996 (26 of 1996) or any statutory modifications or re-enactment thereof and the rules made thereunder and for the time being in force shall apply to the arbitration proceeding under this clause.

It is also a term of this contract that the arbitrator shall adjudicate on only such disputes as are referred to him by the appointing authority and give separate award against each dispute and claim referred to him and in all cases where the total amount of the claims by any party exceeds Rs. 1,00,000/-, the arbitrator shall give reasons for the award.

It is also a term of the contract that if any fees are payable to the arbitrator, these shall be paid equally by both the parties

It is also a term of the contract that the arbitrator shall be deemed to have entered on the reference on the date he issues notice to both the parties calling them to submit their statement of claims and counter statement of claims. The venue of the arbitration shall be such place as may be fixed by the arbitrator in his sole discretion. The fees, if any, of the arbitrator shall, if required to be paid before the award is made and published, be paid half and half by each of the parties. The cost of the reference and of the award (including the fees, if any, of the arbitrator) shall be in the discretion of the arbitrator who may direct to any by whom and in what manner, such costs or any part thereof shall be paid and fix or settle the amount of costs to be so paid.

CLAUSE 26

Contractor to indemnify Govt. against Patent Rights

The contractor shall fully indemnify and keep indemnified the Director, IIM Indore against any action, claim or proceeding relating to infringement or use of any patent or design or any alleged patent or design rights and shall pay any royalties which may be payable in respect of any article or part thereof included in the contract. In the event of any claims made under or action brought against Government in respect of any such matters as aforesaid, the contractor shall be immediately notified thereof and the contractor shall be at liberty, at his own expense, to settle any dispute or to conduct any litigation that may arise there from, provided that the contractor shall not be liable to indemnify the Director, IIM Indore if the infringement of the patent or design or any alleged patent or design right is the direct result of an order passed by the Engineer-in-Charge in this behalf

CLAUSE 27

Lump sum Provisions in Tender

When the estimate on which a tender is made includes lump sum in respect of parts of the work, the contractor shall be entitled to payment in respect of the items of work involved or the part of the work in question at the same rates as are payable under this contract for such items, or if the part of the work in question is not, in the opinion of the Engineer-in-Charge payable of measurement, the Engineer-in-Charge may at his discretion pay the lump-sum amount entered in the estimate, and the certificate in writing of the Engineer-in-Charge shall be final and conclusive against the contractor with regard to any sum or sums payable to him under the provisions of the clause.

CLAUSE 28

Action where no Specifications are Specified

In the case of any class of work for which there is no such specifications as referred to in Clause 11, such work shall be carried out in accordance with the Bureau of Indian Standards Specifications. In case there are no such specifications in Bureau of Indian Standards, the work shall be carried out as per manufacturers' specifications, if not available then as per District Specifications. In case there are no such specifications as required above, the work shall be carried out in all respects in accordance with the instructions and requirements of the Engineer-in-Charge.

CLAUSE 29

Withholding and lien in respect of sum due from contractor

(i) Whenever any claim or claims for payment of a sum of money arises out of or under the contract or against the contractor, the Engineer-in-Charge or the Government shall be entitled to withhold and also have a lien to retain such sum or sums in whole or in part from the security, if any deposited by the contractor and for the purpose aforesaid, the Engineer in- Charge or the Government shall be entitled to withhold the security deposit, if any, furnished as the case may be and also have a lien over the same pending finalisation or adjudication of any such claim. In the event of the security being insufficient to cover the claimed amount or amounts or if no security has been taken from the contractor, the Engineer-in-Charge or the Government shall be entitled to withhold and have a lien to retain to the extent of such claimed amount or amounts referred to above, from any sum or sums found payable or which may at any time thereafter become payable to the contractor under the same contract or any other contract with the Engineer-in-Charge of the Government or any contracting person through the Engineerin-Charge pending finalization of adjudication of any such claim.

It is an agreed term of the contract that the sum of money or moneys so withheld or retained under the lien referred to above by the Engineer-in-Charge or Government will be kept withheld or retained as such by the Engineer-in-Charge or Government till the claim arising out of or under the contract is determined by the arbitrator(if the contract is governed by the arbitration clause) by the competent court, as the case may be and that the contractor will have no claim for interest or damages whatsoever on any account in respect of such withholding or retention under the lien referred to above and duly notified as such to the contractor. For the purpose of this clause, where the contractor is a partnership firm or a limited company, the Engineer-in-Charge or the Government shall be entitled to withhold and also have a lien to retain towards such claimed amount or amounts in whole or in part from any sum found payable to any partner/limited company as the case may be, whether in his individual capacity or otherwise.

(ii) Government shall have the right to cause an audit and technical examination of the works and the final bills of the contractor including all supporting vouchers, abstract, etc., to be made after payment of the final bill and if as a result of such audit and technical examination any sum is found to have been overpaid in respect of any work done by the contractor under the contract or any work claimed to have been done by him under the contract and found not to have been executed, the contractor shall be liable to refund the amount of over-payment and it shall be lawful for Government to recover the same from him in the manner prescribed in sub-clause (i) of this clause or in any other manner legally permissible; and if it is found that the contractor was paid less than what was due to him under the contract in respect of any work executed by him under it, the
amount of such under payment shall be duly paid by Government to the contractor, without any interest thereon whatsoever. Provided that the Government shall not be entitled to recover any sum overpaid, nor the contractor shall be entitled to payment of any sum paid short where such payment has been agreed upon between the Chief Engineer or Executive Engineer on the one hand and the contractor on the other under any term of the contract permitting payment for work after assessment by the Chief Engineer or the Executive Engineer.

CLAUSE 29A
Lien in respect of claims in other Contracts
Any sum of money due and payable to the contractor (including the security deposit returnable to him) under the contract may be withheld or retained by way of lien by the Engineer-in-Charge or the Government or any other contracting person or persons through Engineer-in-Charge against any claim of the Engineer-in-Charge or Government or such other person or persons in respect of payment of a sum of money arising out of or under any other contract made by the contractor with the Engineer- in-Charge or the Government or with such other person or persons.

It is an agreed term of the contract that the sum of money so withheld or retained under this clause by the Engineer-in-Charge or the Government will be kept withheld or retained as such by the Engineer-in-Charge or the Government or till his claim arising out of the same contract or any other contract is either mutually settled or determined by the arbitration clause or by the competent court, as the case may be and that the contractor shall have no claim for interest or damages whatsoever on this account or on any other ground in respect of any sum of money withheld or retained under this clause and duly notified as such to the contractor.

CLAUSE 30

Employment of coal mining or controlled area labour not permissible

The contractor shall not employ coal mining or controlled area labour falling under any category whatsoever on or in connection with the work or recruit labour from area within a radius of 32 km (20 miles) of the controlled area. Subject as above the contractor shall employ imported labour only i.e., deposit imported labour or labour imported by contractors from area, from which import is permitted.

Where ceiling price for imported labour has been fixed by State or Regional Labour Committees

not more than that ceiling price shall be paid to the labour by the contractor.

The contractor shall immediately remove any labourer who may be pointed out by the Engineer-in-Charge as being a coal mining or controlled area labourer. Failure to do so shall render the contractor liable to pay to Government a sum calculated at the rate of Rs.10/- per day per labourer.

The certificate of the Engineer-in-Charge about the number of coal mining or controlled area labourer and the number of days for which they worked shall be final and binding upon all parties to this contract.

It is declared and agreed between the parties that the aforesaid stipulation in this clause is one in which the public are interested within the meaning of the exception in Section 74 of Indian Contract Act, 1872.

Explanation:- Controlled Area means the following areas:

Districts of Dhanbad, Hazaribagh, Jamtara - a Sub-Division under Santhal Pargana Commissionery, Districts of Bankuara, Birbhum, Burdwan, District of Bilaspur.

Any other area which may be declared a Controlled Area by or with the approval of the CentralGovernment

CLAUSE 31

Unfiltered water Supply

The contractor(s) shall make his/their own arrangements for water required for the work and nothing extra will be paid for the same. This will be subject to the following conditions.

(i) That the water used by the contractor(s) shall be fit for construction purposes to the satisfaction of the Engineer-in-Charge.

(ii) The Engineer-in-Charge shall make alternative arrangements for supply of water at the risk and cost of contractor(s) if the arrangements made by the contractor(s) for procurement of water are in the opinion of the Engineer-in- Charge, unsatisfactory.

CLAUSE 31 A

Departmental water supply, if available

Water if available may be supplied to the contractor by the department subject to the following

conditions:-

(i) The water charges @ 1 % shall be recovered on gross amount of the work done.

(ii) The contractor(s) shall make his/their own arrangement of water connection and laying of pipelines from existing main of source of supply.

(iii) The Department do not guarantee to maintain uninterrupted supply of water and it will be incumbent on the contractor(s) to make alternative arrangements for water at his/ their own cost in the event of any temporary break down in the Government water main so that the progress of his/their work is not held up for want of water. No claim of damage or refund of water charges will be entertained on account of such break down.

CLAUSE 32

Alternate water Arrangements

(i) Where there is no piped water supply arrangement and the water is taken by the contractor from the wells or hand pump constructed by the Government, no charge shall be recovered from the contractor on that account. The contractor shall, however, draw water at such hours of the day that it does not interfere with the normal use for which the hand pumps and wells are intended. He will also be responsible for all damage and abnormal repairs arising out of his use, the cost of which shall be recoverable from him. The Engineer-in-Charge shall be the final authority to determine the cost recoverable from the contractor on this account and his decision shall be binding on the contractor.

(ii) The contractor shall be allowed to construct temporary wells in Government land for taking water for construction purposes only after he has got permission of the Engineer-in- Charge in writing. No charges shall be recovered from the contractor on this account, but the contractor shall be required to provide necessary safety arrangements to avoid any accidents or damage to adjacent buildings, roads and service lines. He shall be responsible for any accidents or damage caused due to construction and subsequent maintenance of the wells and shall restore the ground to its original condition after the wells are dismantled on completion of the work.

CLAUSE 33

Return of Surplus materials

Notwithstanding anything contained to the contrary in this contract, where any materials for the execution of the contract are procured with the assistance of Government either by issue from Government stocks or purchase made under orders or permits or licences issued by Government, the contractor shall hold the said materials economically and solely for the purpose of the contract and not dispose of them without the written permission of the Government and return, if required by the Engineer-in-Charge, all surplus or unserviceable materials that may be left with him after the completion of the contract or at its termination for any reason whatsoever on being paid or credited such price as the Engineer-in-Charge shall determine having due regard to the condition of the materials. The price allowed to the contractor however shall not exceed the amount charged to him excluding the element of storage charges. The decision of the Engineer-in-Charge shall be final and conclusive. In the event of breach of the aforesaid condition, the contractor shall in addition to throwing himself open to action for contravention of the terms of the licence or permit and/or for criminal breach of trust, be liable to Government for all moneys, advantages or profits resulting or which in the usual course would have resulted to him by reason of such breach.

CLAUSE 34

Hire of Plant &Machinery

(i) The contractor shall arrange at his own expense all tools, plant, machinery and equipment (hereinafter referred to as T&P) required for execution of the work except for the Plant & Machinery listed in Schedule 'C' and stipulated for issue to the contractor. If the contractor requires any item of T&P on hire from the T&P available with the Government over and above the T&P stipulated for issue, the Government will, if such item is available, hire it to the contractor at rates to be agreed upon between him and the Engineer-in-Charge. In such a case, all the conditions hereunder for issue of T&P shall also be applicable to such T&P as is agreed to be issued.

(ii) Plant and Machinery when supplied on hire charges shown in Schedule 'C' shall be made over and taken back at the departmental equipment yard/shed shown in

Schedule 'C' and the contractor shall bear the cost of carriage from the place of issue to the site of work and back. The contractor shall be responsible to return the plant and machinery with condition in which it was handed over to him, and he shall be responsible for all damage caused to the said plant and machinery at the site of work or elsewhere in operation and otherwise during transit including damage to or loss of plant and for all losses due to his failure to return the same soon after the completion of the work for which it was issued. The Divisional Engineer shall be the sole judge to determine the liability of the contractor and its extent in this regard and his decision shall be final and binding on the contractor.

(iii) The plant and machinery as stipulated above will be issued as and when available and if required by the contractor. The contractor shall arrange his programme of work according to the availability of the plant and machinery and no claim, whatsoever, will be entertained from him for any delay in supply by the Department.

(iv) The hire charges shall be recovered at the prescribed rates from and inclusive of the date the plant and machinery made over upto and inclusive of the date of the return in good order even though the same may not have been working for any cause except major breakdown due to no fault of the contractor or faulty use requiring more than three working days continuously (excluding intervening holidays and Sundays) for bringing the plant in order. The contractor shall immediately intimate in writing to the Engineer-in- Charge when any plant or machinery gets out of order requiring major repairs as aforesaid. The Engineer-in-Charge shall record the date and time of receipt of such intimation in the log sheet of the plant or machinery. Based on this if the breakdown before lunch period or major breakdown will be computed considering half a day's breakdown on the day of complaint. If the breakdown occurs in the post lunch period of major breakdown will be computed starting from the next working day. In case of any dispute under this clause, the decision of the Chief Engineer shall be final and binding on the contractor.

(v) The hire charges shown above are for each day of 8 hours (inclusive of the one hour lunch break) or part thereof.

(vi) Hire charges will include service of operating staff as required and also supply of lubricating oil and stores for cleaning purposes. Power fuel of approved type, firewood, kerosene oil etc. for running the plant and machinery and also the full time chowkidar for guarding the plant and machinery against any loss or damage shall be arranged by the contractor who shall be fully responsible for the safeguard and security of plant and machinery. The contractor shall on or before the supply of plant and machinery sign an agreement indemnifying the Department against any loss or damage caused to the plant and machinery either during transit or at site of work.

(vii) Ordinarily, no plant and machinery shall work for more than 8 hours a day inclusive of one hour lunch break. In case of an urgent work however, the Engineer-in-Charge may, at his discretion, allow the plant and machinery to be worked for more than normal period of 8 hours a day. In that case, the hourly hire charges for overtime to be borne by the contractor shall be 50% more than the normal proportionate hourly charges (1/8th of the daily charges) subject to a minimum of half day's normal charges on any particular day. For working out hire charges for over time, a period of half an hour and above will be charged as one hour and a period of less than half an hour will be ignored.

(viii) The contractor shall release the plant and machinery every seventh day for periodical servicing and/or wash out which may take about three to four hours or more. Hire charges for full day shall be recovered from the contractor for the day of servicing/ wash out irrespective of the period employed in servicing.

(ix) The plant and machinery once issued to the contractor shall not be returned by him on account of lack of arrangements of labour and materials, etc. on his part, the same will be returned only when they are required for major repairs or when in the opinion of the Engineer-in-Charge, the work or a portion of work for which the same was issued is completed.

(x) Log Book for recording the hours of daily work for each of the plant and machinery supplied to the contractor will be maintained by the Department and will be countersigned by the contractor or his authorized agent daily. In case the contractor contests the correctness of the entries and/or fails to sign the Log Book, the decision of the Engineerin-Charge shall be final and binding on him. Hire charges will be calculated according to the entries in the Log Book and will be binding on the contractor. Recovery on account of hire charges for road rollers shall be made for the minimum number of days worked out on the assumption that a roller can consolidate per day and maximum
quantity of materials or area surfacing as noted against each in the annexed statement (see attached annexure).

(xi) In the case of concrete mixers, the contractors shall arrange to get the hopper cleaned and the drum washed at the close of the work each day or each occasion.
(a) In case rollers for consolidation are employed by the contractor himself, log book for such rollers shall be maintained in the same manner as is done in case of departmental rollers, maximum quantity of any items to be consolidated for each roller-day shall also be same as in Annexure to Clause 34(x). For less use of rollers, recovery for the less roller days shall be made at the stipulated issue rate.

(xii) The contractor shall be responsible to return the plant and machinery in the condition in which it was handed over to him and he shall be responsible for all damage caused to the said plant and machinery at the site of work or elsewhere in operation or otherwise or during transit including damage to or loss of parts, and for all losses due to his failure to return the same soon after the completion of the work for which it was issued. The Divisional Engineer shall be the sole judge to determine the liability of the contractor and its extent in this regard and his decision shall be final and binding on the contractor.

(xiii) The contractor will be exempted from levy of any hire charges for the number of days he is called upon in writing by the Engineer-in-Charge to suspend execution of the work, provided Government plant and machinery in question have, in fact, remained idle with the contractor because of the suspension

(xiv) In the event of the contractor not requiring any item of plant and machinery issued by Government though not stipulated for issue in Schedule 'C' any time after taking delivery at the place of issue, he may return it after two days written notice or at any time without notice if he agrees to pay hire charges for two additional days without, in any way, affecting the right of the Engineer-in-Charge to use the said plant and machinery during the said period of two days as he likes including hiring out to a third party

CLAUSE 35
Condition relating to use of asphaltic materials-Deleted

CLAUSE 36
Employment of Technical Staff and employees
Contractors Superintendence, Supervision, Technical Staff & Employees

(i) The contractor shall provide all necessary superintendence during execution of the work and all along thereafter as may be necessary for proper fulfilling of the obligations under the contract.
The contractor shall immediately after receiving letter of acceptance of the tender and before commencement of the work, intimate in writing to the Engineer-in-Charge, the name(s), qualifications, experience, age, address(s) and other particulars along with certificates, of the principal technical representative to be in charge of the work and other technical representative(s) who will be supervising the work. Minimum requirement of such technical representative(s) and their qualifications and experience shall not be lower than specified in Schedule 'F'. The Engineer-in-Charge shall within 3 days of receipt of such communication intimate in writing his approval or otherwise of such a representative(s) to the contractor. Any such approval may at any time be withdrawn and in case of such withdrawal, the contractor shall appoint another such representative(s) according to the provisions of this clause. Decision of the tender accepting authority shall be final and binding on the contractor in this respect. Such a principal technical
representative and other technical representative(s) shall be appointed by the contractor soon after receipt of the approval from Engineer-in-charge and shall be available at site before start of work.

All the provisions applicable to the principal technical representative under the Clause will also be applicable to other technical representative(s) The principal technical representative and other technical representative(s) shall be present at the site of work for supervision at all times when any construction activity is in progress and also present himself/themselves, as required, to the Engineer-in-Charge and/or his designated representative to take instructions. Instructions given to the principal technical representative or other technical representative(s) shall be deemed to have the same force as if these have been given to the contractor. The principal technical representative
and other technical representative(s) shall be actually available at site fully during all stages of execution of work, during recording/checking/test checking of measurements of works and whenever so required by the Engineer-in-Charge and shall also note down instructions conveyed by the Engineer-in- Charge or his designated representative(s) in the site order book and shall affix his/their signature in token of noting down the instructions and in token of acceptance of measurements/ checked measurements/ test checked measurements. The representative(s) shall not look after any other work. Substitutes, duly approved by Engineer-in-Charge of the work in similar manner as aforesaid shall be provided in event of absence of any of the representative(s) by more
than two days.

If the Engineer-in-Charge, whose decision in this respect is final and binding on the contractor, is convinced that no such technical representative(s) is/are effectively appointed or is/are effectively attending or fulfilling the provision of this clause, a

recovery (nonrefundable) shall be effected from the contractor as specified in Schedule 'F' and the decision of the Engineer-In-Charge as recorded in the site order book and measurement recorded checked/test checked in Measurement Books shall be final and binding on the contractor. Further if the contractor fails to appoint suitable technical Principal technical representative and/or other technical representative(s) and if such appointed persons are not effectively present or are absent by more than two days without duly approved. Substitute or do not discharge their responsibilities satisfactorily, the Engineer-in-Charge shall have full powers to suspend the execution of the work until such date as suitable other technical representative(s) is/are appointed and the contractor shall be held responsible for the delay so caused to the work. The contractor shall submit a certificate of employment of the technical representative(s) (in the form of copy of Form-16 or CPF deduction issued to the Engineers employed by him) alongwith every on account bill final bill and shall produce evidence if at any time so required by the Engineer-in-Charge.

(ii) The contractor shall provide and employ on the site only such technical assistants as are skilled and experienced in their respective fields and such foremen and supervisory staff as are competent to give proper supervision to the work. The contractor shall provide and employ skilled, semiskilled and unskilled labour as is necessary for proper and timely execution of the work. The Engineer-in-Charge shall be at liberty to object to and require the contractor to remove from the works any person who in his opinion misconducts himself, or is incompetent or negligent in the performance of his duties or whose employment is otherwise considered by the Engineer-in-Charge to be undesirable. Such person shall not be employed again at works site without the written permission of the Engineer-in-Charge and the persons so removed shall be replaced as soon as possible by competent substitutes.

CLAUSE 37
Levy/Taxes payable by Contractor

(i) Sales Tax/VAT (except Service Tax), Building and other Construction Workers Welfare Cess or any other tax or Cess in respect of this contract shall be payable by the contractor and Government shall not entertain any claim whatsoever in this respect. However, in respect of service tax, same shall be paid by the contractor to the concerned department on demand and it will be reimbursed to him by the Engineer-in-Charge after satisfying that it has been actually and genuinely paid by the contractor.

(ii) The contractor shall deposit royalty and obtain necessary permit for supply of the red bajri, stone, kankar, etc. from local authorities.

If pursuant to or under any law, notification or order any royalty, cess or the like becomes payable by the Government of India and does not any time become payable by the contractor to the State Government, Local authorities in respect of any material used by the contractor in the works, then in such a case, it shall be lawful to the Government of India and it will have the right and be entitled to recover the amount paid in the circumstances as aforesaid from dues of the contractor.

CLAUSE 38
Conditions for reimbursement of levy/taxes if levied after receipt of tenders

(i) All tendered rates shall be inclusive of all taxes and levies (except Service Tax) payable under respective statutes. However, if any further tax or levy or cess is

imposed by Statute, after the last stipulated date for the receipt of tender including extensions if any and the contractor thereupon necessarily and properly pays such taxes/levies/cess, the contractor shall be reimbursed the amount so paid, provided such payments, if any, is not, in the opinion of the Chief engineer (whose decision shall be final and binding on the contractor) attributable to delay in execution of work within the control of the contractor.

(ii) The contractor shall keep necessary books of accounts and other documents for the purpose of this condition as may be necessary and shall allow inspection of the same by a duly authorized representative of the Government and/or the Engineer-in-Charge and shall also furnish such other information/document as the Engineer-in-Charge may require from time to time.

(iii) The contractor shall, within a period of 30 days of the imposition of any such further tax or levy or cess, give a written notice thereof to the Engineer-in-charge that the same is given pursuant to this condition, together with all necessary information relating thereto.

CLAUSE 39
Termination of Contract on death of contractor
Without prejudice to any of the rights or remedies under this contract, if the contractor dies, the Executive Engineer on behalf of the Director, IIM Indoreshall have the option of terminating the contract without compensation to the contractor

CLAUSE 40
If relative working in IIM INDORE then the contractor not allowed to tender
The contractor shall not be permitted to tender for works / responsible for award and execution of contracts if his near relative is posted as Accountant or as an officer in any capacity between the grades of the Chief Engineer and Junior Engineer (both inclusive). He shall also intimate the names of persons who are working with him in any capacity or are subsequently employed by him and who are near relatives to any Officer in the IIMI. Any breach of this condition by the contractor would render him liable to be removed from the approved list of contractors of this Department. If however the contractor is registered in any other department, he shall be debarred from tendering in IIMI for any breach of this condition.

NOTE: By the term "near relatives" is meant wife, husband, parents and grandparents, children and grandchildren, brothers and sisters, uncles, aunts and cousins and their corresponding in-laws.

CLAUSE 41
No Gazetted Engineer to work as Contractor within one year of retirement
No engineer of gazetted rank or other gazetted officer employed in engineering or administrative duties in an engineering department of the Government of India shall work as a contractor or employee of a contractor for a period of one year after his retirement from government service without the previous permission of Government of India in writing. This contract is liable to be cancelled if either the contractor or any of his employees is found at any time to be such a person who had not obtained the permission of Government of India as aforesaid, before submission of the tender or engagement in the contractor's service, as the case may be.

CLAUSE 42

Return of material & recovery for excess material issued.

(i) After completion of the work and also at any intermediate stage in the event of nonreconciliation of materials issued, consumed and in balance - (see Clause 10), theoretical quantity of materials issued by the Government for use in the work shall be calculated on the basis and method given hereunder:-

(a) Quantity of cement & bitumen shall be calculated on the basis of quantity of cement & bitumen required for different items of work as shown in the Schedule of Rates mentioned in Schedule 'F'. In case any item is executed for which standard constants for the consumption of cement or bitumen are not available in the above mentioned schedule/statement or cannot be derived from the same shall be calculated on the basis of standard formula to be laid down by the Engineer-in-Charge.

(b) Theoretical quantity of steel reinforcement or structural steel sections shall be taken as the quantity required as per design or as authorized by Engineer-in-Charge, including authorized lappages, chairs etc. plus 3% wastage due to cutting into pieces, such theoretical quantity being determined and compared with the actual issues each diameter wise, section wise and category wise separately

(c) Theoretical quantity of G.I. & C.I. or other pipes, conduits, wires and cables, pig lead and G.I./M.S. sheets shall be taken as quantity actually required and measured plus 5% for wastage due to cutting into pieces (except in the case of G.I./M.S. sheets it shall be 10%), such determination & comparison being made diameter wise & category wise.

(d) For any other material as per actual requirements.

(ii) Over the theoretical quantities of materials so computed a variation shall be allowed as specified in Schedule 'F'. The difference in the net quantities of material actually issued to the contractor and the theoretical quantities including such authorized variation, if not returned by the contractor or if not fully reconciled to the satisfaction of the Engineer-in-Charge within fifteen days of the issue of written notice by the Engineer-in-charge to this effect shall be recovered at the rates specified in Schedule 'F', without prejudice to the provision of the relevant conditions regarding return of materials governing the contract. Decision of Engineer-in-Charge in regard to theoretical quantities of materials, which should have been actually used as per the Annexure of the standard schedule of rates and recovery at rates specified in Schedule 'F', shall be final & binding on the contractor. For non scheduled items, the decision of the Chief Engineer regarding theoretical uantities of materials which should have been actually used, shall be final and binding on the contractor.

(iii) The said action under this clause is without prejudice to the right of the Government to take action against the contractor under any other conditions of contract for not doing the work according to the prescribed specifications.

CLAUSE 43

Compensation during warlike situations

The work (whether fully constructed or not) and all materials, machines, tools and plants, scaffolding, temporary buildings and other things connected therewith shall be at the risk of the contractor until the work has been delivered to the Engineer-in-Charge and a certificate from him to that effect obtained. In the event of the work or any materials properly brought to the site for incorporation in the work being damaged or destroyed in consequence of hostilities or warlike operation, the

contractor shall when ordered (in writing) by the Engineer-in-Charge to remove any debris from the site, collect and properly stack or remove in store all serviceable materials salvaged from the damaged work and shall be paid at the contract rates in accordance with the provision of this agreement for the work of clearing the site of debris, stacking or removal of serviceable material and for reconstruction of all works ordered by the Engineer-in-Charge, such payments being in addition to compensation upto the value of the work originally executed before being damaged or destroyed and not paid for. In case of works damaged or destroyed but not already measured and paid for, the compensation shall be assessed by the Executive Engineer upto Rs.5,000/- and by the Chief Engineer concerned for a higher amount. The contractor shall be paid for the damages/destruction suffered and for restoring the material at the rate based on analysis of rates tendered for in accordance with the provision of the contract. The certificate of the Engineer-in-Charge regarding the quality and quantity of materials and the purpose for which they were collected shall be final and binding on all parties to this contract.

Provided always that no compensation shall be payable for any loss in consequence of hostilities or warlike operations (a) unless the contractor had taken all such precautions against air raid as are deemed necessary by the A.R.P. Officers or the Engineer-in-Charge (b) for any material etc. not on the site of the work or for any tools, plant, machinery, scaffolding, temporary building and other things not intended for the work.

In the event of the contractor having to carry out reconstruction as aforesaid, he shall be allowed such extension of time for its completion as is considered reasonable by the Executive Engineer.

CLAUSE 44
Apprentices Act provisions to be complied with
The contractor shall comply with the provisions of the Apprentices Act, 1961 and the rules and orders issued thereunder from time to time. If he fails to do so, his failure will be a breach of the contract and the Chief Engineer may, in his discretion, cancel the contract. The contractor shall also be liable for any pecuniary liability arising on account of any violation by him of the provisions of the said Act.

CLAUSE 45
Release of Security deposit after labour clearance
Release of Security Deposit of the work shall not be refunded till the contractor produces a clearance deposit after labour certificate from the Labour Officer. As soon as the work is virtually complete the contractor shall apply for the clearance certificate to the Labour Officer under intimation to the Engineer-in-Charge. The Engineer-in-Charge, on receipt of the said communication, shall write to the Labour Officer to intimate if any complaint is pending against the contractor in respect of the work. If no complaint is pending, on record till after 3 months after completion of the work and/or no communication is received from the Labour Officer to this effect till six months after the date of completion, it will be deemed to have received the clearance certificate and the Security Deposit will be released if otherwise due.

7.0 SPECIAL CONDITION OF CONTRACT

1. The tenderer shall acquaint himself with the proposed site of work.

2. If for any reasons, any part of the site is not available temporarily for some time for part of the work under the contract, the agreed construction schedule shall be suitably modified and contractor shall diligently divert his men and materials to utilize them appropriately, profitably and no claim of damages whatsoever shall be entertained on this account. However, the contractor shall be allowed extension of time for completing the work as deemed fit by the competent authority. The contractor shall also not be entitled to any compensation for any loss suffered by him and revision in the rates quoted by him.
    a. On account of delay in commencing the work by the contractor.
    b. On account of reduction in the scope of work.
    c. On account of suspension of work or abandoned after award of work.

3. The contractor shall make his own arrangement for obtaining electric connection required for execution of work and make necessary payments directly to the concerned departments and nothing extra shall be payable on this account. The contractor shall make his own arrangement for water suitable for construction.

4. The contractor shall provide, at his own cost instruments for surveying, weighing and measuring purpose at the site of work as may be necessary for execution of the work.

5. The contractor shall construct a sample unit of different activities complete in all respect as per the directions of the Engineer-in-charge and Architect. This sample unit shall be got approved from the Engineer-in-charge and Architect before commencing the mass work.

6. The contractor shall take care of all safety precautions pertaining to construction of work, such as scaffolding, ladder, working platforms, gangways, electric arc/ gas welding, use of hoist and construction machinery.

7. On account of security consideration, some restrictions may be imposed by the security staff on the working and/ movement of men and materials etc. The contractor shall be bound to follow all such restrictions/ instructions and he shall organise his work accordingly. No claim on this account, whatsoever, shall be payable.

8. The contractor shall take all precautions to avoid accidents by exhibiting necessary caution boards day and night, speed limit boards, red flags, red lights and providing barriers. He shall be responsible for all damages and accidents caused to existing/ new work due to negligence on his part. No hindrance shall be caused to traffic during the execution of the work.

9. The contractor shall be responsible for the watch and ward of all materials brought by the contractor to site against pilferage and breakage during the period of installation and thereafter till the works are physically handed over to the department.

10. The contractor shall take all preventive measures against any damage caused by rain, snowfall, floods or any other natural calamity, whatsoever during the execution of the work. The contractor shall be fully responsible for any damage to the Owners property and to the work for which the payment has been advanced to him under the contract. However, the contractor shall maintain an equal to the payment received against the work done, at his own cost. This will also cover the defect liability period. This shall be favouring the Director, Indian Institute of Management Indore. Nothing extra on this account shall be payable to the contractor for maintaining such insurance Policy.

11. The work will be carried out in the manner complying, in all respects, with the requirements of relevant bye-laws of the local body under the jurisdiction of which the work is to be executed or as directed by the Engineer-in-Charge and nothing extra shall be paid on this account.

12. The contractor shall comply with proper and legal orders and directions of the local or public authority or municipality and abide by their rules and regulations and pay all fees and charges which may be liable.

13. The contractor shall give due notices to Municipal, Police and/or other authorities that may be required under the law/rules under force in the area and obtain all requisite licenses for temporary obstructions / enclosures and pay all charges which may be leviable on account of his execution of work under the agreement. Nothing extra shall be payable on this account.

14. All materials to be incorporated in the work shall be arranged by the contractor and shall be in accordance with the specifications laid down.

15. The tenderer shall use materials bearing ISI Certification Mark unless otherwise specified or allowed in writing by the Engineer-in-Charge. Any material banned by the department shall not be used in the work.

16. The contractor shall submit to the Engineer-in-charge and Architect samples of all materials for approval. Such samples of materials which affect aesthetics of the work shall also be got approved from the Engineer-in-charge and Architect of the project before procuring bulk supplies. These approved samples shall be preserved and retained in the custody of the Engineer-in-charge as standards of materials till the completion of the work. The cost of such samples shall be borne by the Contractor and nothing shall be payable on this account over the Agreement rates.

17. The contractor shall be required to get all the necessary mandatory and other tests as per the specifications/ IS codes, carried out on materials/ work from an approved laboratory as per the direction of the Engineer-in-charge. The testing charges and conveyance from the site shall be borne by the contractor.

18. In case any material / work is found sub-standard the same shall be rejected by the Engineer-in-charge/ Architect representative and the same shall be removed from the site of work within 48 hours, failing which the same shall be got removed by the Engineer-in-charge at the risk and cost of the contractor without giving any further notice and time.

19. In order to ensure quality of work during its execution, the Engineer-in-charge/ Architect representative may require samples for mandatory or routine testing of materials. All costs of these samples, their packaging, conveyance from the site to the testing laboratory and return, shall be borne by the contractor.

20. Even ISI marked materials may be subjected to quality test at the discretion of the Engineer-in-charge/ Architect. Whenever ISI marked materials are brought to the site of work the contractor shall, if required by the Engineer-in-charge/ Architect, furnish manufacturer's test certificate or test certificate from approved testing laboratory to establish that the materials procured by the contractor, satisfy the provisions of relevant ISI codes. The testing charges shall be borne by the contractor. However cement/steel will be necessarily tested before start of work and also during the execution of work as per the requirements of specifications and will not be used till test certificates are obtained and approved by Engineer-in-Charge/ Architect.

21. The contractor shall supply free of charge the material required for testing. The cost of tests shall be borne by the contractor.

22. Secured advance for material if so desired by the contractor, will be given as per CPWD rules/regulation/norms on production of test certificate from the manufacturer.

23. The work shall be executed and measured in metric system. The metric dimensions given in the schedule of quantities and drawing etc. shall be followed. (The dimension in FPS units wherever indicated are for guidance only) The figures in the drawings shall be followed.

24. The contractor shall be responsible for completing the work and for satisfying all terms and conditions of the Contract without any extra payment over his quoted rates unless otherwise specified. The contractor shall quote his rate for various items of work accordingly and no claim whatsoever shall be entertained for any incidental or extra work involved in the execution of the work as per nomenclature of the item and the specifications indicated in the tender documents.

25. Subject to the nomenclature of the item as per schedule of quantities, the specification indicated in the tender documents, the rates quoted shall include cost of all materials including royalty and taxes if any, labour, sundry inputs, execution of work at all heights, levels, pattern and design for all leads, lifts and depths including overhead charges and contractor's profit. Nothing extra shall be paid on this account.

26. The rate shall be inclusive of making design, pattern and execution of work as per Architectural and structural drawings, at all levels and heights.

27. The rates shall be inclusive of making any holes in walls/ RCC work for fixing any fixture/ frame work and making good the structure to its original shape and finish.

28. The rate shall be inclusive of working under water and adverse of foul conditions and including pumping out or bailing out water, unless otherwise

specified in the nomenclature. This will include water encountered from any source such as rains, floods and any other cause whatsoever and including sub-soil water.

29. Other agencies doing works related with this project will also simultaneously execute the works and the contractor shall afford necessary co-ordination for un-hindered completion of these sub-works.

30. The contractor shall leave necessary holes, opening, etc. as may be directed by the Engineer-in-charge for laying, burying or fixing, conduits, pipes, boxes, hooks, fans etc. Conduits for electrical wiring/cables will be laid in a way that they leave enough space for concreting and do no adversely affect structural members.

31. The contractor shall give a satisfactory performance test of installations individually and as a whole to ensure their proper functioning before the work is finally declared and completed and accepted.

32. The contractor shall continue to maintain watch and ward to safeguard the Owner's property in his possession until the same is formally handed over as per directions of the Engineer-in-charge. Nothing extra over agreement rates shall be paid on this account.

33. All tools, plants and measuring or weighing equipment shall be arranged by the contractor himself and nothing extra shall be paid to the contractor on this account.

34. The quantities of various items incorporated in the tender are approximate. However, the payments shall be made to the contractors on the basis of actual measurements taken at site.

35. The contractor shall protect the adjoining buildings or works and the work under execution from fire and shall make adequate arrangements for fire protection and fire fighting and if any property is damaged, by fire due to the negligence of the contractor, the same shall be made good by the contractor at his own cost, to the entire satisfaction of Engineer-in-charge.

36. The contractor shall provide adequate lighting arrangements as approved by the Engineer-in-charge for carrying out the work during night time, if so required and also provide all other facilities for the labour employed to carry out the work as per direction of Engineer-in-Charge.

37. In order to achieve the targeted date of completion the contractor may have to work in multiple shifts, round the clock including public and gazetted holidays and nothing extra shall be paid on this account.

38. The contractor shall get the samples of all the materials to be used, in the work approved from Engineer-in-Charge and Architect before going for bulk procurement. Bulk procurement shall be taken up only after obtaining approval from the Engineer-in-charge. Any delay in getting the samples approved shall be contractor’s responsibility.

39. All materials, articles and workmanship shall be of respective best quality and

kind for the class described in the schedule of quantities and specifications. All materials, so used in different items of work shall be subject to the approval of the Engineer-in-charge and Architect.

40. The contractor shall be responsible for all statutory provisions and deductions towards ESI, PF or any other, as the case may be or any other levies and taxes shall be borne by the contractors. The TDS and Contract Tax or any other statutory levels/taxes incorporated from time to time shall be deducted progressively from the running account bills, as applicable at the time of payment. No claim in this regard shall be entertained.

41. The contractor is supposed to abide the minimum wages act, and shall produce all records to the Engineer-in-charge or any other statutory authority as and when called for. The Engineer-in-charge does not hold any responsibility on account of any lapses in this regard.

42. No extension of time shall be granted to the contractor on account of rains or inclement weather conditions.

(a) For any clarification/ doubt, the Institute may organize regular meetings with Contractor. The contractor shall attend such meetings invariably as and when required.

(b) In respect of the work of other agencies, where the commencement or progress of such work of any other agency is dependent upon the completion of particular portions of the contractor's work or generally upon the contractor maintaining progress in accordance with the approved coordinated construction programme, it shall be the responsibility of the Contractor to complete such portions and maintain such progress.

(c) Should any difference arise between the contractor and the other agencies, these shall immediately be brought to the attention of the Engineer-in-Charge who after reviewing the matters causing the differences will give their decision which shall be final and binding on the contractor.

(d) The contractor shall have to do all drilling of holes and cutting of walls, chases or other elements of the building for the complete and proper installation of the pipe lines/ ducts and other equipments by using electrically operated tools such as drills/ chases cutting machine etc. Manual drilling or chiseling or cutting shall be permitted on special request only.

(e) No chiseling or cutting or drilling of RCC columns, beams, girders and other principal structural members shall be done unless prior permission has been granted by the Engineer-in charge in writing.

(f) All chases and openings made by the contractor for his pipe lines shall be filled/ covered over with cement plaster in reasonable manner. Before rough plastering on the pipe surfaces the concealed pipes shall be secured to the wall by using proper supports/ clamps.

(g) After completion of work and before issuance of certificate of virtual completion the contractor shall submit eight (8) sets to the Engineer-in-charge, layout drawing drawn at appropriate scale and with 2 copies on Compact disc

indicating the complete system 'as installed', with written approval of Engineer-in-charge on the 8 sets.

(h) The contractor shall prepare and produce instruction, operation and maintenance manuals in English for the use, operation and the maintenance of the supplied equipment and installations, and submit to the Engineer-in-charge in (8) copies at the time of handing over. The shall get generally consist of the following:

(i) Description of the project
(ii) Operating instructions
(iii) Maintenance instructions including procedures for preventive maintenance
(iv) Manufacturer's catalogues.
(v) Spare parts list
(vi) Trouble shooting charts
(vii) Drawings
(viii) Type and routine test certificates for major items.
(ix) One (1) set of reproducible 'as built' drawings on polyester film.

43. The contractor shall be provided adequate storage/ office space for his use. The space has to be maintained/ constructed by the contractor as per his usage requirements.

44. All spaces allotted to the contractor as described above shall be vacated and all structures removed from site at any time as and when required and directed by the Engineer-in-charge, unconditionally and without any reservation. The Engineer-in-charge will not be obliged to give any reason for such removal. Upon receiving instructions to vacate the space, the contractor shall immediately remove all his structures, materials, etc. from the sources and clear and clean-up the site to the satisfaction of the Engineer-in-charge.

45. It shall be the responsibility of the Contractor to safeguard the site and ensure that no illegal encroachments are made by outside elements within the area allotted to the contractor. Upon completion of the work or earlier as required by Engineer-in-Charge, the contractor shall vacate the land totally without any reservation.

46. The contractor will arrange to erect, at his own cost, barbed wire or other appropriate fence around the infrastructure site, with entry/exit gates at suitable points. The contractor shall, at his own cost, provide and erect suitable fencing around the spaces allotted to him at the infrastructure sites to ensure the security of his men. Materials and equipment within the sites and in relation to other contractors who will also be allotted spaces at above sites.

47. The security of workmen, materials, equipment stores etc. within the area allotted to the contractor shall be the responsibility of the contractor.

48. The site of work shall have required equipments for various tests at site by the contractor at his own cost and nothing extra shall be payable on this account.

49. The contractor shall arrange minimum plant and equipments at site for the

execution of work. These may have to be increased depending on the requirement site.

50. The quantities indicated are for guidance only however it may vary to any extent and the contractor should not have any financial or other implications for such variations. The owner reserves to reduce the scope of work of any item if the contractor fails to deliver the works in time and the contractor shall not ask for any financial consideration for such deletion of scope of the work.

51. Any item which is not available in the BOQ shall be paid as per DSR 2014 rates. If it is not available in BOQ & DSR 2014 then extra item shall be worked out as actual cost of the materials and actual cost of the labour plus 15% as overhead and profit. The decision of Engineer-in-charge will be conclusive and final binding on the contractor.

52. The contractor shall take photographs of site prior to commencement of work, during construction and after completion of work as suggested and shall submit the photographs in soft and hard copies to IIM and Architect for which no extra payment will be made.

53. If required and directed by Engineer-In-Charge, contractor shall arrange visits of his personnel comprising of Engineer-In-Charges to various places/ plants in or out side Indore to check and verify the quality of material at manufacturer's places. No extra cost shall be given for this to contractor.

54. Layout of works shall be got checked by Engineer-in -charge & only then further work shall be taken by after approval.

55. Proforma of Registers to be as per standard CPWD formats.

MODEL RULES FOR THE PROTECTION OF HEALTH AND SANITARY ARRANGMENTS FOR WORKERS EMPLOYED BY CONTRACTORS

1. APPLICATION

The rules shall apply to all buildings and construction works in which twenty or more workers ate ordinarily employed or are proposed to be employed in any day during the period which the contract work is in progress.

2. DEFINITION

Work place means a place where twenty or more workers are ordinarily employed in connection with construction work on any day during the period during which the contract work is in progress.

3. FIRST-AID FACILITIES

At every work place there shall be provided and maintained, so as to be early accessible during working hours, first -aid boxes at the rate of not less than one box for 150 contract labour or part thereof ordinarily employed.

The first-aid box shall be distinctly marked with a red cross on white back ground and shall contain the following equipment:-

a) For work places in which the number of contract labour employed does not exceed 50.

Each first-aid box shall contain the following minimum medicine/things:

6 small sterilized dressings.
3 medium size sterilized dressings
3 large size sterilized dressings
3 large sterilized burn dressings.
1 (30ml.) bottle containing a two per cent alcoholic solution of iodine.
1 (30 ml) bottle containing saivolalile having the dose and mode of administration indicated on the label.
1 snake bite lancet
1 (30 gms) bottle of potassium permanganate crystals.
1 pair scissors.
1 copy of the first-aid leaflet issued by the Director General, Factory Advice Service and Labour Institutes, Government if India.
1 bottle con laming 100 tablets (each of 5 gms,) of aspirin.
Ointment /or bums
A bottle of suitable surgical antiseptic solution,

b) For work places in which the number of contract labour exceed 50. Each first-aid box shall contain the following equipments:

1. 12 small sterilized dressings
2. 6 medium size sterilized dressings
3. 6 large size sterilized dressings
4. 6 large size sterilized burn dressings
5. 6 (15 gms) packets sterilized cotton wool.

6. 1 (60 ml.) bottle containing a two percent alcoholic solution iodine.
7. 1 (60ml.) bottle containing salvolatile having the dose and mode of administration indicated on the label
8. 1 roll of adhesive plaster.
9. 1 snake bite lancet
1 (30gms) bottle of potassium permanganate crystals.
11. 1 pair scissors.
12. 1 copy of the first-aid leaflet issued by the Director General Factory Advice Service and Labour Institutes/ Government of India.
13. A bottle containing 100 tables (each of 5 gms) of aspirin.
14. Ointment for burns

15. A bottle of suitable surgical antiseptic solution.

Adequate arrangements shall be made for immediate recoupment of the equipment when necessary.

Nothing except the prescribed contents shall be kept in the First-aid box.

The first-aid box shall be kept in charge of a responsible person who shall always be readily available during the working hours of the work place.

A person in charge of the First-aid box shall be a person trained in First-aid treatment, in the work places where the number of contract labour employed is or more.

In work places where the number of contract labour employed is 500 or more and hospital facilities are not available within easy distance from the works. First-aid posts shall be established and run by a trained compounder. The compounder shall be on duly and shall be available al all hours when the workers are at work

Where work places are situated in places which are not towns or cities, a suitable motor transport shall be Kept readily available to carry injured person or person suddenly taken ill lo the nearest hospital.

4. DRINKING WATER

i) In every work place, there shall be provided and maintained at suitable places, easily accessible to labour, a sufficient supply of told water fit for drinking.

ii) Where drinking water is obtained from an intermittent public water supply, each work place shall be provided with storage where such drinking water shall be stored.

iii) Every water supply or storage shall be at a distance of not less than 50 feet from any latrine drain or other source of pollution. Where water has to be drawn from an existing well which is within such proximity of latrine, drain or any other source of pollution, the well shall be properly chlorinated before water is drawn form it for drinking. All such wells shall be entirely dosed in and be provided with a trap door, which shall be dust and waterproof.

iv) A reliable pump shall be fitted to each covered well, the trap door shall be kept locked and opened only for cleaning or inspection which shall be done at feast once a month.

WASHING FACILITIES

i. In every work place adequate and suitable facilities for washing shall be provided and maintained for the use of contract labour employed therein

ii. Separate and adequate cleaning facilities shall be provided for the use of male and female workers.

iii. Such facilities shall be conveniently accessible and shall be kept in clean and hygienic condition.

5. LATRINES AND URINALS

i. Latrines shall be provided in every work place on the following scale namely:

a. Where female are employed there shall be at least one latrine for every 25 females.

b. Where males are employed, there shall be at least one latrine for every 25 males.

Provided that where the number of males or females exceeds 100, it shall be sufficient if there is one latrine for 25 males or females as the case may be up to the fits! 100, and one every 50 thereafter

ii. Every latrine shall be under cover and so partitioned off as to secure privacy, and shall have a proper door and fastenings.

iii. Construction of latrines: The inside walls shall be constructed of masonry or some suitable heat-resisting nonabsorbent materials and shall be cement washed inside and outside at least once a year, latrines shall not be of a standard lower than borehole system.

iv. a) Where workers of both sexes are employed, there shall be displayed outside each block of latrine and urinal, 3 notice in the language understood by the majority of the workers "For Women Only" as the case may be.

b)The notice shall also bear the figure of a man or of a woman, as the case may be.

v. There shall be at least one Urinal for male workers up to50 and one for female workers up to fifty employed at a lime, provided that where the number of male or female workmen, as the case may be exceeds 500, it shall be sufficient if there is one urinal for every 50 males or females up to the first 500 and one for every 100 or thereafter.

vi. a) The latrines and urinals shall be adequately lighted and shall be maintained in a clean and sanitary condition at all times.

b) Latrines and urinals other than those connected with a flush sewage system shall comply with the requirements of the Public Health Authorities.

vii Water shall be provided by means of lap or otherwise so as to be conveniently accessible in or near the latrines and urinals.

viii Disposal of excreta: Unless otherwise arranged for by the local sanitary authority, arrangements for proper disposal of excreta by incineration at the work place shall be made by means of a suitable incinerator. Alternately excreta may be disposed of by putting a layer of night soil at the bottom of a pucca tank prepared for the purposed and covering it with a 15 cm layer of waste or refuse and them covering it with a layer of earth for a fortnight (when it will turn to manure).

ix The contractor shall al his own expense, carry out all instructions issued to him by the Engineer-in-charge to effect proper disposal of might soil and other conservancy work in respect of the contractor's workmen or employees on the site. The contractor shall be responsible for payment of any charges which may be levied by Municipal for execution on his behalf.

6. VISION OF SHELTER DURING REST At every place there shall be provided, free of cost, four suitable sheds, two for meals and the other two for rest separately for the use of men and women labour. The height of each shelter shall no! be less than 3 meters (10 ft) from the floor level to the lowest part o(the roof. These shall be Kepi clean and the space provided shall be on the basis of 0.6 sq.m. (6 sqft.) per head.

7. Provided that the Engineer-in-Charge may permit subject to his satisfaction, a portion of the building under construction or other alternative accommodation to be used for the purpose.

8. CRECHES

i) At every work place, at which 20 or more women worker ate ordinarily employed, there shall be provided two rooms of reasonable dimensions for the use of their children under at the age of six years. One room shall be used as a play room for the children and the other as their bedroom. The rooms shall be constructed with specifications as per clause 19H (ii) a, b & c

ii) The rooms shall be provided with suitable and sufficient openings in for light and ventilation. There shall be adequate provision of sweepers to keep the places clean.

iii) The contractor shall supply adequate number of toys and games in the playroom and sufficient number of cots and bedding in the bedroom.

iv) The contractor shall provide one Ayaa to look after the children in the crèche when, the number of women workers does not exceed 50 and two when the number of women workers exceed 50.

v) The use of the rooms earmarked as crèches shall be restricted lo children, their attendants and mothers of the children,

9. CANTEENS

i) In every work place where the works regarding the employment of contract labour it likely to continue for six months and where in contract labour numbering one hundred or more are ordinarily employed, an adequate canteen shall be provided by the contractor for the use of such contract labour.

ii) The canteen shall be maintained by the contractor in an efficient manner.

iii) The canteen shall consist of at least a dining hall, kitchen, storeroom, pantry and washing places separately for workers and utensils.

iv) The canteen shall be sufficiently lighted at all times when any person has access to it.

v) The floor shall be made of smooth and impervious materials and inside shall be lime washed or colour washed al least once in each year. Provided that the inside walls of the kitchen shall be lime washed every four months.

vi) The premises of the canteen shall be maintained in a clean and sanitary condition.

vii) Waste water shall be carried away in suitable covered drains and shall not be allowed lo accumulate so as lo cause a nuisance.

viii) Suitable arrangements shall be made for the collection and disposal of garbage.

ix) The dining hall shall accommodate at a lime 30 percent of the contract labour working at a time.

x) The floor area of the dining hall, excluding the area occupied by the service counter and any furniture expect tables and chairs shall not be less than one square meter (10 sq, ft.) per diner lo be accommodated as prescribed in the sub rule o.

xi) a) A portion of the dining hall and service counter shall be partitioned off and reserved for women workers in proportion to their number,
Washing places for women shall be separate and screened lo secure

xii) Sufficient tables, stools, chairs or benches shall be available for the number of diners lo be accommodated as prescribed in sub-Rule.

xiii) a) 1. There shall be provided and maintained sufficient utensils crockery furniture and any other equipment necessary for the efficient running of the canteen.

2. The furniture utensils and other equipment shall be maintained in a clean and hygienic condition.

b) 1. Suitable clean clothes for the employees serving in the canteen shall be provided and maintained.

2. A service counter, if provided, shall have top of smooth and impervious material.

3. Suitable facilities including an adequate supply of hot water shall be provided for the cleaning of utensils and equipments

xiv) The food stuffs and other items to be served in the canteen shall be in conformity with the normal habits of the contract labour.

xv) The charges for food for stuffs, beverages and any other items served in the canteen shall be based on "No profit", "No loss" and shall be conspicuously displayed in the canteen

xvi) In arriving at the price of food stuffs and other article served in the canteen, the following items shall not be taken into consideration as expenditure namely:

a) The rent of land and building.
b) The depreciation and maintenance charges for the building and equipments provided for the canteen,
c) The cost of purchase, repairs and replacement of equipments including furniture, crockery, cutlery and utensils.
d) The water charges and other charges incurred for lighting and ventilation
e) The interest and amounts spent on the provision and maintenance of equipments provided for the canteen.

xvii) The accounts pertaining to the canteen shall be audited once every 12 months by registered accountants and auditors.

1. Anti-Malarial Precautions

The contractor shall at his own expenses, confirm to all anti malarial instructions given to him by the Engineer-in-charge including the filling up of any borrow pits which may have been dug by him.

2- The above rules shall be incorporated in the contracts and in notices inviting lenders and shall from an integral part of the contracts.

3. Amendments.

Institute on behalf of Government may from time to time, add to or amend these rules and issue directions it may consider necessary for the purpose of removing any difficulty which may arise in the administration thereof.

INTEGRITY PACT

To,
……..,
……..,
……..

Sub: NIT No. ……. for the work …….....

Dear Sir,

It is here by declared that IIM Indore is committed to follow the principle of transparency, equity and competitiveness in public procurement.

The subject Notice Inviting Tender (NIT) is an invitation to offer made on the condition that the Bidder will sign the integrity Agreement, which is an integral part of tender/bid documents, failing which the tenderer/bidder will stand disqualified from the tendering process and the bid of the bidder would be summarily rejected.

This declaration shall form part and parcel of the Integrity Agreement and signing of the same shall be deemed as acceptance and signing of the Integrity Agreement on behalf of the IIM Indore.

Yours faithfully

Chief Engineer

INTEGRITY PACT

To,
Chief Engineer,
……..,
……..

Sub: Submission of Tender for the work of ……..……..

Dear Sir,

I/We acknowledge that IIM Indore is committed to follow the principles thereof as enumerated in the Integrity Agreement enclosed with the tender/bid document.

I/We agree that the Notice Inviting Tender (NIT) is an invitation to offer made on the condition that I/We will sign the enclosed integrity Agreement, which is an integral part of tender documents, failing which I/We will stand disqualified from the tendering process. I/We acknowledge that THE MAKING OF THE BID SHALL BE REGARDED AS AN UNCONDITIONAL AND ABSOLUTE ACCEPTANCE of this condition of the NIT.

I/We confirm acceptance and compliance with the Integrity Agreement in letter and spirit and further agree that execution of the said Integrity Agreement shall be separate and distinct from the main contract, which will come into existence when tender/bid is finally accepted by IIM Indore.
I/We acknowledge and accept the duration of the Integrity Agreement, which shall be in the line with Article 1 of the enclosed Integrity Agreement.

I/We acknowledge that in the event of my/our failure to sign and accept the Integrity Agreement,
while submitting the tender/bid, IIM Indore shall have unqualified, absolute and unfettered right to disqualify the tenderer/bidder and reject the tender/bid is accordance with terms and conditions of the tender/bid.

Yours faithfully

(Duly authorized signatory of the Bidder)

To be signed by the bidder and same signatory competent / authorized to sign the relevant contract on behalf of IIM Indore.

INTEGRITY AGREEMENT

This Integrity Agreement is made at ..... on this ..... day of ..... 20.....

BETWEEN

Director, IIM Indore represented through Chief Engineer,
.....,

.....,
(Hereinafter referred as the **'Principal/Owner'**, which expression shall unless repugnant to the meaning or context hereof include its successors and permitted assigns)

AND

.....
.....
(Name and Address of the Individual/firm/Company)
through .....
(Hereinafter referred to as the
(Details of duly authorized signatory)
"Bidder/Contractor" and which expression shall unless repugnant to the meaning or context hereof include its successors and permitted assigns)

Preamble

WHEREAS the Principal / Owner has floated the Tender (NIT No. .....) (hereinafter referred to as "Tender/Bid") and intends to award, under laid down organizational procedure, contract for.....
..(Name of work) hereinafter referred to as the "Contract".

AND WHEREAS the Principal/Owner values full compliance with all relevant laws of the land, rules, regulations, economic use of resources and of fairness/transparency in its relation with its Bidder(s) and Contractor(s).

AND WHEREAS to meet the purpose aforesaid both the parties have agreed to enter into this Integrity Agreement (hereinafter referred to as "Integrity Pact" or "Pact"), the terms and conditions of which shall also be read as integral part and parcel of the Tender/Bid documents and Contract between the parties.

NOW, THEREFORE, in consideration of mutual covenants contained in this Pact, the parties hereby agree as follows and this Pact witnesses as under:

Article 1: Commitment of the Principal/Owner

(1) The Principal/Owner commits itself to take all measures necessary to prevent corruption and to observe the following principles:

(a) No employee of the Principal/Owner, personally or through any of his/her family members, will in connection with the Tender, or the execution of the Contract, demand, take a promise for or accept, for self or third person, any material or immaterial benefit which the person is not legally entitled to.

(b) The Principal/Owner will, during the Tender process, treat all Bidder(s) with equity and reason. The Principal/Owner will, in particular, before and during the Tender process, provide to all Bidder(s) the same information and will not provide to any Bidder(s) confidential / additional information through which the Bidder(s) could obtain an advantage in relation to the Tender process or the Contract execution.

(c) The Principal/Owner shall endeavour to exclude from the Tender process any person, whose conduct in the past has been of biased nature.

(2) If the Principal/Owner obtains information on the conduct of any of its employees which is a criminal offence under the Indian Penal code (IPC)/Prevention of Corruption Act, 1988 (PC Act) or is in violation of the principles herein mentioned or if there be a substantive suspicion in this regard, the Principal/Owner will inform the Chief Vigilance Officer and in addition can also initiate disciplinary actions as per its internal laid down policies and procedures.

Article 2: Commitment of the Bidder(s)/Contractor(s)

(1) It is required that each Bidder/Contractor (including their respective officers, employees and agents) adhere to the highest ethical standards, and report to the Government / Department all suspected acts of fraud or corruption or Coercion or Collusion of which it has knowledge or becomes aware, during the tendering process and throughout the negotiation or award of a contract.
(2) The Bidder(s)/Contractor(s) commits himself to take all measures necessary to prevent corruption. He commits himself to observe the following principles during his participation in the Tender process and during the Contract execution:
(a) The Bidder(s)/Contractor(s) will not, directly or through any other person or firm, offer, promise or give to any of the Principal/Owner's employees involved in the Tender process or execution of the Contract or to any third person any material or other benefit which he/she is not legally entitled to, in order to obtain in exchange any advantage of any kind whatsoever during the Tender process or during the execution of the Contract.

(b) The Bidder(s)/Contractor(s) will not enter with other Bidder(s) into any undisclosed agreement or understanding, whether formal or informal. This applies in particular to prices, specifications, certifications, subsidiary contracts, submission or non-submission of bids or any other actions to restrict competitiveness or to cartelize in the bidding process.

(c) The Bidder(s)/Contractor(s) will not commit any offence under the relevant IPC/PC Act. Further the Bidder(s)/ Contract(s) will not use improperly, (for the purpose of competition or personal gain), or pass on to others, any information or documents provided by the Principal/Owner as part of the business relationship, regarding plans, technical proposals and business details, including information contained or transmitted electronically.

(d) The Bidder(s)/Contractor(s) of foreign origin shall disclose the names and addresses of agents/
representatives in India, if any. Similarly Bidder(s)/Contractor(s) of Indian Nationality shall disclose names and addresses of foreign agents/representatives, if any. Either the Indian agent on behalf of the foreign principal or the foreign principal directly could bid in a tender but not both. Further, in cases where an agent participate in a tender on behalf of one manufacturer, he shall not be allowed to

quote on behalf of another manufacturer along with the first manufacturer in a subsequent/parallel tender for the same item.

(d) The Bidder(s)/Contractor(s) will, when presenting his bid, disclose any and all payments he has made, is committed to or intends to make to agents, brokers or any other intermediaries in connection with the award of the Contract.

(3) The Bidder(s)/Contractor(s) will not instigate third persons to commit offences outlined above or be an accessory to such offences.

(4) The Bidder(s)/Contractor(s) will not, directly or through any other person or firm indulge in fraudulent practice means a willful misrepresentation or omission of facts or submission of fake/forged documents in order to induce public official to act in reliance thereof, with the purpose of obtaining unjust advantage by or causing damage to justified interest of others and/or to influence the procurement process to the detriment of the Government interests.

(5) The Bidder(s)/Contractor(s) will not, directly or through any other person or firm use Coercive Practices (means the act of obtaining something, compelling an action or influencing a decision through intimidation, threat or the use of force directly or indirectly, where potential or actual injury may befall upon a person, his/ her reputation or property to influence their participation in the tendering process).

Article 3: Consequences of Breach

Without prejudice to any rights that may be available to the Principal/Owner under law or the Contract or its established policies and laid down procedures, the Principal/Owner shall have the following rights in case of breach of this Integrity Pact by the Bidder(s)/Contractor(s) and the Bidder/ Contractor accepts and undertakes to respect and uphold the Principal/Owner's absolute right:

(1) If the Bidder(s)/Contractor(s), either before award or during execution of Contract has committed a transgression through a violation of Article 2 above or in any other form, such as to put his reliability or credibility in question, the Principal/Owner after giving 14 days notice to the contractor shall have powers to disqualify the Bidder(s)/Contractor(s) from the Tender process or terminate/determine the Contract, if already executed or exclude the Bidder/Contractor from future contract award processes. The imposition and duration of the exclusion will be determined by the severity of transgression and determined by the Principal/Owner. Such exclusion may be forever or for a limited period as decided by the Principal/Owner.

(2) Forfeiture of EMD/Performance Guarantee/Security Deposit: If the Principal/Owner has disqualified the Bidder(s) from the Tender process prior to the award of the Contract or terminated/determined the Contract or has accrued the right to terminate/determine the Contract according to Article 3(1), the Principal/Owner apart from exercising any legal rights that may have accrued to the Principal/Owner, may in its considered opinion forfeit the entire amount of Earnest Money Deposit, Performance Guarantee and Security Deposit of the Bidder/Contractor.

(3) Criminal Liability: If the Principal/Owner obtains knowledge of conduct of a Bidder or Contractor, or of an employee or a representative or an associate of a Bidder or Contractor which constitutes corruption within the meaning of IPC Act, or if

the Principal/Owner has substantive suspicion in this regard, the Principal/Owner will inform the same to law enforcing agencies for further investigation.

Article 4: Previous Transgression

(1) The Bidder declares that no previous transgressions occurred in the last 5 years with any other Company in any country confirming to the anticorruption approach or with Central Government or State Government or any other Central/State Public Sector Enterprises in India that could justify his exclusion from the Tender process.

(2) If the Bidder makes incorrect statement on this subject, he can be disqualified from the Tender process or action can be taken for banning of business dealings/ holiday listing of the Bidder/Contractor as deemed fit by the Principal/ Owner.

(3) If the Bidder/Contractor can prove that he has resorted / recouped the damage caused by him and has installed a suitable corruption prevention system, the Principal/Owner may, at its own discretion, revoke the exclusion prematurely.

Article 5: Equal Treatment of all Bidders/Contractors/Subcontractors

(1) The Bidder(s)/Contractor(s) undertake(s) to demand from all subcontractors a commitment in conformity with this Integrity Pact. The Bidder/Contractor shall be responsible for any violation(s) of the principles laid down in this agreement/Pact by any of its Subcontractors/sub-vendors.

(2) The Principal/Owner will enter into Pacts on identical terms as this one with all Bidders and Contractors.

(3) The Principal/Owner will disqualify Bidders, who do not submit, the duly signed Pact between the Principal/Owner and the bidder, along with the Tender or violate its provisions at any stage of the Tender process, from the Tender process.

Article 6- Duration of the Pact

This Pact begins when both the parties have legally signed it. It expires for the Contractor/Vendor 12 months after the completion of work under the contract or till the continuation of defect liability period, whichever is more and for all other bidders, till the Contract has been awarded.

If any claim is made/lodged during the time, the same shall be binding and continue to be valid despite the lapse of this Pacts as specified above, unless it is discharged/determined by the Competent Authority, IIM Indore.

Article 7- Other Provisions

(1) This Pact is subject to Indian Law, place of performance and jurisdiction is the Head quarters of the Division of the Principal/Owner, who has floated the Tender.

(2) Changes and supplements need to be made in writing. Side agreements have not been made.

(3) If the Contractor is a partnership or a consortium, this Pact must be signed by all the partners or by one or more partner holding power of attorney signed by all partners and consortium members. In case of a Company, the Pact must be signed by a representative duly authorized by board resolution.

(4) Should one or several provisions of this Pact turn out to be invalid; the remainder of this Pact remains valid. In this case, the parties will strive to come to an agreement to their original intensions.
(5) It is agreed term and condition that any dispute or difference arising between the parties with regard to the terms of this Integrity Agreement / Pact, any action taken by the Owner/Principal in accordance with this Integrity Agreement/ Pact or interpretation thereof shall not be subject to arbitration.

Article 8- LEGAL AND PRIOR RIGHTS
All rights and remedies of the parties hereto shall be in addition to all the other legal rights and remedies belonging to such parties under the Contract and/or law and the same shall be deemed to be cumulative and not alternative to such legal rights and remedies aforesaid. For the sake of brevity, both the Parties agree that this Integrity Pact will have precedence over the Tender/Contact documents with regard any of the provisions covered under this Integrity Pact.

IN WITNESS WHEREOF the parties have signed and executed this Integrity Pact at the place and date
first above mentioned in the presence of following witnesses:

.....
(For and on behalf of Principal/Owner)

.....
(For and on behalf of Bidder/Contractor)

WITNESSES:

1. .....
(signature, name and address)

2. .....
(signature, name and address)

Place:

Dated :

SAFETY CODES

1. Suitable scaffolds should be provided for workmen for all works that cannot safely be done from the ground, or from solid construction except such short period work as can be done safely from ladders. When a ladder is used, an extra mazdoor shall be engaged for holding the ladder and if the ladder is used for carrying materials as well suitable footholds and hand-hold shall be provided on the ladder and the ladder shall be given an inclination not steeper than ¼ to 1(¼ horizontal and 1 vertical.)

2. Scaffolding of staging more than 3.6 m (12ft.) above the ground or floor, swung or suspended from an overhead support or erected with stationary support shall have a guard rail properly attached or bolted, braced and otherwise secured at least 90 cm. (3ft.) high above the floor or platform of such scaffolding or staging and extending along the entire length of the outside and ends there of with only such opening as may be necessary for the delivery of materials. Such scaffolding or staging shall be so fastened as to prevent it from swaying from the building or structure.

3. Working platforms, gangways and stairways should be so constructed that they should not sag unduly or unequally, and if the height of the platform or the gangway or the stairway is more than 3.6 m (12ft.) above ground level or floor level, they should be closely boarded, should have adequate width and should be suitably fastened as described in (2) above.

4. Every opening in the floor of a building or in a working platform shall be provided with suitable means to prevent the fall of person or materials by providing suitable fencing or railing whose minimum height shall be 90 cm. (3ft.)

5. Safe means of access shall be provided to all working platforms and other working places. Every ladder shall be securely fixed. No portable single ladder shall be over 9m. (30ft.) in length while the width between side rails in rung ladder shall in no case be less than 29 cm. (11½") for ladder upto and including 3 m. (10 ft.) in length. For longer ladders, this width should be increased at least ¼" for each additional 30 cm. (1 foot) of length. Uniform step spacing of not more than 30 cm shall be kept. Adequate precautions shall be taken to prevent danger from electrical equipment. No materials on any of the sites or work shall be so stacked or placed as to cause danger or inconvenience to any person or the public. The contractor shall provide all necessary fencing and lights to protect the public from accident and shall be bound to bear the expenses of defence of every suit, action or other proceedings at law that may be brought by any person for injury sustained owing to neglect of the above precautions and to pay any damages and cost which may be awarded in any such suit; action or proceedings to any such person or which may, with the consent of the contractor, be paid to compensate any claim by any such person.

6. (a) Excavation and Trenching - All trenches 1.2 m. (4ft.) or more in depth, shall at all times be supplied with at least one ladder for each 30 m. (100 ft.) in length or fraction thereof, Ladder shall extend from bottom of the trench to at least 90 cm. (3ft.) above the surface of the ground. The side of the trenches which are 1.5 m. (5ft.) or more in depth shall be stepped back to give suitable slope or securely held by timber bracing, so as to avoid the danger of sides collapsing. The excavated materials shall not be placed within 1.5 m. (5ft.) of the edges of the trench or half of

the depth of the trench whichever is more. Cutting shall be done from top to bottom. Under no circumstances,
undermining or undercutting shall be done.

(b) Safety Measures for digging bore holes:-

(i). If the bore well is successful, it should be safely capped to avoid caving and collapse of the bore well. The failed and the abandoned ones should be completely refilled to avoid caving and collapse;

(ii). During drilling, Sign boards should be erected near the site with the address of the drilling contractor and the Engineer in-charge of the work;

(iii). Suitable fencing should be erected around the well during the drilling and after the installation
of the rig on the point of drilling, flags shall be put 50m alround the point of drilling to avoid entry
of people;

(iv). After drilling the borewell, a cement platform (0.50m x 0.50m x 1.20m) 0.60m above ground level and 0.60m below ground level should be constructed around the well casing;

(v). After the completion of the borewell, the contractor should cap the bore well properly by welding steel plate, cover the bore well with the drilled wet soil and fix thorny shrubs over the soil. This should be done even while reparing the pump;

(vi). After the borewell is drilled the entire site should be brought to the ground level.

7. Demolition - Before any demolition work is commenced and also during the progress of the work,
(i) All roads and open areas adjacent to the work site shall either be closed or suitably protected.

(ii) No electric cable or apparatus which is liable to be a source of danger or a cable or apparatus used by the operator shall remain electrically charged.

(iii) All practical steps shall be taken to prevent danger to persons employed from risk of fire or explosion or flooding. No floor, roof or other part of the building shall be so overloaded with debris or materials as to render it unsafe.

8. All necessary personal safety equipment as considered adequate by the Engineer-in-Charge should be kept available for the use of the person employed on the site and maintained in a condition suitable for immediate use, and the contractor should take adequate steps to ensure proper use of equipment by those concerned:- The following safety equipment shall invariably be provided.
(i) Workers employed on mixing asphaltic materials, cement and lime mortars shall be provided with protective footwear and protective goggles.

(ii) Those engaged in white washing and mixing or stacking of cement bags or any material which is injurious to the eyes, shall be provided with protective goggles.

(iii) Those engaged in welding works shall be provided with welder's protective eyeshields.

(iv) Stone breaker shall be provided with protective goggles and protective clothing and seated at
sufficiently safe intervals.

(v) When workers are employed in sewers and manholes, which are in active use, the contractors shall ensure that the manhole covers are opened and ventilated atleast for an hour before the workers are allowed to get into the manholes, and the manholes so opened shall be cordoned off with suitable railing and provided with warning signals or boards to prevent accident to the public. In addition, the contractor shall ensure that the following safety measure are adhered to :-

(a) Entry for workers into the line shall not be allowed except under supervision of the JE or any
other higher officer.

(b) At least 5 to 6 manholes upstream and downstream should be kept open for at least 2 to 3 hours before any man is allowed to enter into the manhole for working inside.

(c) Before entry, presence of Toxic gases should be tested by inserting wet lead acetate paper which changes colour in the presence of such gases and gives indication of their presence.

(d) Presence of Oxygen should be verified by lowering a detector lamp into the manhole. In case, no Oxygen is found inside the sewer line, workers should be sent only with Oxygen kit.

(e) Safety belt with rope should be provided to the workers. While working inside the manholes, such rope should be handled by two men standing outside to enable him to be pulled out during emergency.

(f) The area should be barricaded or cordoned of by suitable means to avoid mishaps of any kind. Proper warning signs should be displayed for the safety of the public whenever cleaning works are undertaken during night or day.

(g) No smoking or open flames shall be allowed near the blocked manhole being cleaned.

(h) The malba obtained on account of cleaning of blocked manholes and sewer lines should be immediately removed to avoid accidents on account of slippery nature of the malba.

(i) Workers should not be allowed to work inside the manhole continuously. He should be given rest intermittently. The Engineer-in-Charge may decide the time up to which a worker may be allowed to work continuously inside the manhole.

(j) Gas masks with Oxygen Cylinder should be kept at site for use in emergency.

(k) Air-blowers should be used for flow of fresh air through the manholes. Whenever called for, portable air blowers are recommended for ventilating the manholes. The

Motors for these shall be vapour proof and of totally enclosed type. Non sparking gas engines also could be used but they should be placed at least 2 metres away from the opening and on the leeward side protected from wind so that they will not be a source of friction on any inflammable gas that might be present.

(l) The workers engaged for cleaning the manholes/sewers should be properly trained before allowing to work in the manhole.

(m) The workers shall be provided with Gumboots or non sparking shoes bump helmets and gloves non sparking tools safety lights and gas masks and portable air blowers (when necessary). They must be supplied with barrier cream for anointing the limbs before working inside the sewer lines.

(n) Workmen descending a manhole shall try each ladder stop or rung carefully before putting his full weight on it to guard against insecure fastening due to corrosion of the rung fixed to
manhole well.

(o) If a man has received a physical injury, he should be brought out of the sewer immediately and adequate medical aid should be provided to him.

(p) The extent to which these precautions are to be taken depend on individual situation but the decision of the Engineer-in-Charge regarding the steps to be taken in this regard in an individual case will be final.

(vi) The Contractor shall not employ men and women below the age of 18 years on the work of painting with products containing lead in any form. Wherever men above the age of 18 are employed on the work of lead painting, the following precaution should be taken:-

(a) No paint containing lead or lead products shall be used except in the form of paste or ready made paint.

(b) Suitable face masks should be supplied for use by the workers when paint is applied in the form of spray or a surface having lead paint is dry rubbed and scrapped.

(c) Overalls shall be supplied by the contractors to the workmen and adequate facilities shall be provided to enable the working painters to wash during and on the cessation of work.

9. An additional clause (viii)(i) of Central Public Works Department Safety Code (iv) the Contractor shall not employ women and men below the age of 18 on the work of painting with product containing lead in any form, wherever men above the age of 18 are employed on the work of lead painting, the following principles must be observed for such use :

(i) White lead, sulphate of lead or product containing these pigment, shall not be used in painting operation except in the form of pastes or paint ready for use.

(ii) Measures shall be taken, wherever required in order to prevent danger arising from the application of a paint in the form of spray.

(iii) Measures shall be taken, wherever practicable, to prevent danger arising out of from dust caused by dry rubbing down and scraping.

(iv) Adequate facilities shall be provided to enable working painters to wash during and on cessation of work.

(v) Overall shall be worn by working painters during the whole of working period.

(vi) Suitable arrangement shall be made to prevent clothing put off during working hours being spoiled by painting materials.

(vii) Cases of lead poisoning and suspected lead poisoning shall be notified and shall be subsequently verified by medical man appointed by competent authority of C.P.W.D PWD(DA).

(viii) C.P.W.D./PWD (DA) may require, when necessary medical examination of workers.

(ix) Instructions with regard to special hygienic precautions to be taken in the painting trade shall be distributed to working painters.

10. When the work is done near any place where there is risk of drowning, all necessary equipments should be provided and kept ready for use and all necessary steps taken for prompt rescue of any person in danger and adequate provision, should be made for prompt first aid treatment of all injuries likely to be obtained during the course of the work.

11. Use of hoisting machines and tackle including their attachments, anchorage and supports shall conform to the following standards or conditions :-

(i) (a) These shall be of good mechanical construction, sound materials and adequate strength and free from patent defects and shall be kept repaired and in good working order.

(b) Every rope used in hoisting or lowering materials or as a means of suspension shall be of durable quality and adequate strength, and free from patent defects.

(ii) Every crane driver or hoisting appliance operator, shall be properly qualified and no person under the age of 21 years should be in charge of any hoisting machine including any scaffolding winch or give signals to operator.

(iii) In case of every hoisting machine and of every chain ring hook, shackle swivel and pulley block used in hoisting or as means of suspension, the safe working load shall be ascertained by adequate means. Every hoisting machine and all gear referred to above shall be plainly marked with the safe working load. In case of a hoisting machine having a variable safe working load each safe working load and the condition under which it is applicable shall be clearly indicated. No part of any machine or any gear referred to above in this paragraph shall be loaded beyond the safe working load except for the purpose of testing.

(iv) In case of departmental machines, the safe working load shall be notified by the Electrical Engineer-in-Charge. As regards contractor’s machines the contractors shall notify the safe working load of the machine to the Engineer-in-Charge whenever he

brings any machinery to site of work and get it verified by the Electrical Engineer concerned.

12. Motors, gearing, transmission, electric wiring and other dangerous parts of hoisting appliances should be provided with efficient safeguards. Hoisting appliances should be provided with such means as will reduce to the minimum the risk of accidental descent of the load. Adequate precautions should be taken to reduce to the minimum the risk of any part of a suspended load becoming accidentally displaced. When workers are employed on electrical installations which are already energized, insulating mats, wearing apparel, such as gloves, sleeves and boots as may be necessary should be provided. The worker should not wear any rings, watches and carry keys or other materials which are good conductors of electricity.

13. All scaffolds, ladders and other safety devices mentioned or described herein shall be maintained in safe condition and no scaffold, ladder or equipment shall be altered or removed while it is in use. Adequate washing facilities should be provided at or near places of work.

14. These safety provisions should be brought to the notice of all concerned by display on a notice board at a prominent place at work spot. The person responsible for compliance of the safety code shall be named therein by the contractor.

15. To ensure effective enforcement of the rules and regulations relating to safety precautions the arrangements made by the contractor shall be open to inspection by the Labour Officer or Engineer-in-Charge of the department or their representatives.

16. Notwithstanding the above clauses from (1) to (15), there is nothing in these to exempt the contractor from the operations of any other Act or Rule in force in the Republic of India.

Contractor's Labour Regulations

1. SHORT TITLE
These regulations may be called the IIM Indore Contractors Labour Regulations.

2. DEFINITIONS
i) Workman means any person employed by IIM Indore or its contractor directly or indirectly through a subcontractor with or without the knowledge of the IIM Indore to do any skilled, semiskilled or unskilled manual, supervisory, technical or clerical work for hire or reward, whether the terms of employment are expressed or implied but does not include any person :-

a) Who is employed mainly in a managerial or administrative capacity : or

b) Who, being employed in a supervisory capacity draws wages exceeding five hundred rupees per mensem or exercises either by the nature of the duties attached to the office or by reason of powers vested in him, functions mainly of managerial nature: or

c) Who is an out worker, that is to say, person to whom any article or materials are given out by or on behalf of the principal employers to be made up cleaned, washed, altered, ornamental finished, repaired adopted or otherwise processed for sale for the purpose of the trade or business of the principal employers and the process is to be carried out either in the home of the out worker or in some other premises, not being premises under the control and management of the principal employer.

No person below the age of 14 years shall be employed to act as a workman.

ii) **Fair Wages** means wages whether for time or piece work fixed and notified under the provisions of the Minimum Wages Act from time to time.

iii) **Contractors** shall include every person who undertakes to produce a given result other than a mere supply of goods or articles of manufacture through contract labour or who supplies contract labour for any work and includes a subcontractor.

iv) **Wages** shall have the same meaning as defined in the Payment of Wages Act.

3. i) Normally working hours of an adult employee should not exceed 9 hours a day. The working day shall be so arranged that inclusive of interval for rest, if any, it shall not spread over more than 12 hours on any day.

ii) When an adult worker is made to work for more than 9 hours on any day or for more than 48 hours in any week, he shall be paid over time for the extra hours put in by him at double the ordinary rate of wages.

iii) a) Every worker shall be given a weekly holiday normally on a Sunday, in accordance with the provisions of the Minimum Wages (Central) Rules 1960 as amended from time to time irrespective of whether such worker is governed by the Minimum Wages Act or not.

b) Where the minimum wages prescribed by the Government under the Minimum Wages Act are not inclusive of the wages for the weekly day of rest, the worker shall

be entitled to rest day wages at the rate applicable to the next preceding day, provided he has worked under the same contractor for a continuous period of not less than 6 days.

c) Where a contractor is permitted by the Engineer-in-Charge to allow a worker to work on a normal weekly holiday, he shall grant a substituted holiday to him for the whole day on one of the five days immediately before or after the normal weekly holiday and pay wages to such worker for the work performed on the normal weekly holiday at overtime rate.

4. DISPLAY OF NOTICE REGARDING WAGES ETC.

The contractor shall before he commences his work on contract, display and correctly maintain and continue to display and correctly maintain in a clear and legible condition in conspicuous places on the work, notices in English and in the local Indian languages spoken by the majority of the workers giving the minimum rates of wages fixed under Minimum Wages Act, the actual wages being paid, the hours of work for which such wage are earned, wages periods, dates of payments of wages and other relevant information as per Appendix 'III'.

5. PAYMENT OF WAGES

i) The contractor shall fix wage periods in respect of which wages shall be payable.
ii) No wage period shall exceed one month.
iii) The wages of every person employed as contract labour in an establishment or by a contractor where less than one thousand such persons are employed shall be paid before the expiry of seventh day and in other cases before the expiry of tenth day after the last day of the wage period in respect of which the wages are payable.
iv) Where the employment of any worker is terminated by or on behalf of the contractor the wages earned by him shall be paid before the expiry of the second working day from the date on which his employment is terminated.
v) All payment of wages shall be made on a working day at the work premises and during the working time and on a date notified in advance and in case the work is completed before the expiry of the wage period, final payment shall be made within 48 hours of the last working day.
vi) Wages due to every worker shall be paid to him direct or to other person authorised by him in this behalf.
vii) All wages shall be paid in current coin or currency or in both.
viii) Wages shall be paid without any deductions of any kind except those specified by the Central
Government by general or special order in this behalf or permissible under the Payment of Wages
Act 1956.
ix) A notice showing the wages period and the place and time of disbursement of wages shall be displayed at the place of work and a copy sent by the contractor to the Engineer-in-Charge under
acknowledgment.
x) It shall be the duty of the contractor to ensure the disbursement of wages in the presence of the Junior Engineer or any other authorised representative of the Engineer-in-Charge who will be required to be present at the place and time of disbursement of wages by the contractor to workmen.
xi) The contractor shall obtain from the Junior Engineer or any other authorized representative of the Engineer-in-Charge as the case may be, a certificate under his

signature at the end of the entries in the "Register of Wages" or the "Wage-cum-Muster Roll" as the case may be in the following form:-
"Certified that the amount shown in column No .....has been paid to the workman concerned in my presence on ..... at ....."

6. FINES AND DEDUCTIONS WHICH MAY BE MADE FROM WAGES

(i) The wages of a worker shall be paid to him without any deduction of any kind except the following:-
(a) Fines
(b) Deductions for absence from duty i.e. from the place or the places where by the terms of his employment he is required to work. The amount of deduction shall be in proportion to the period for which he was absent.
(c) Deduction for damage to or loss of goods expressly entrusted to the employed person for custody, or for loss of money or any other deduction which he is required to account, where such damage or loss is directly attributable to his neglect or default.
(d) Deduction for recovery of advances or for adjustment of overpayment of wages, advances granted shall be entered in a register.
(e) Any other deduction which the Central Government may from time to time allow.

(ii) No fines should be imposed on any worker save in respect of such acts and omissions on his part as have been approved of by the Chief Labour Commissioner.

Note :- An approved list of Acts and Omissions for which fines can be imposed is enclosed at Appendix-X

(iii) No fine shall be imposed on a worker and no deduction for damage or loss shall be made from his wages until the worker has been given an opportunity of showing cause against such fines or deductions.

(iv) The total amount of fine which may be imposed in any one wage period on a worker shall not
exceed an amount equal to three paise in a rupee of the total wages, payable to him in respect of
that wage period.

(v) No fine imposed on any worker shall be recovered from him by instalment, or after the expiry of
sixty days from the date on which it was imposed.

(vi) Every fine shall be deemed to have been imposed on the day of the act or omission in respect of
which it was imposed.

7. LABOUR RECORDS

(i) The contractor shall maintain a **Register of persons employed** on work on contract in Form XIII of the CL (R&A) Central Rules 1971 (Appendix IV)
(ii) The contractor shall maintain a **Muster Roll** register in respect of all workmen employed by him on the work under Contract in Form XVI of the CL (R&A) Rules 1971 (Appendix V).
(iii) The contractor shall maintain a **Wage Register** in respect of all workmen employed by him on

the work under contract in Form XVII of the CL (R&A) Rules 1971 (Appendix VI).
(iv) **Register of accident** - The contractor shall maintain a register of accidents in such form as may
be convenient at the work place but the same shall include the following particulars:

a) Full particulars of the labourers who met with accident.
b) Rate of Wages.
c) Sex
d) Age
e) Nature of accident and cause of accident.
f) Time and date of accident.
g) Date and time when admitted in Hospital,
h) Date of discharge from the Hospital.
i) Period of treatment and result of treatment.
j) Percentage of loss of earning capacity and disability as assessed by Medical Officer.
k) Claim required to be paid under Workmen's Compensation Act.
I) Date of payment of compensation.
m) Amount paid with details of the person to whom the same was paid.
n) Authority by whom the compensation was assessed.
o) Remarks

v) The contractor shall maintain a **Register of Fines** in the Form XII of the CL (R&A) Rules 1971
(Appendix-XI)

The contractor shall display in a good condition and in a conspicuous place of work the approved
list of acts and omissions for which fines can be imposed (Appendix-X)

vi) The contractor shall maintain a **Register of deductions for damage or loss** in Form XX of the
CL (R&A) Rules 1971 (Appendix-XII)

vii) The contractor shall maintain a **Register of Advances** in Form XXIII of the CL (R&A) Rules 1971 (Appendix-XIII)

viii) The contractor shall maintain a **Register of Overtime** in Form XXIII of the CL (R&A) Rules 1971 (Appendix-XIV)

8. ATTENDANCE CARD-CUM-WAGE SLIP

i) The contractor shall issue an Attendance card-cum-wage slip to each workman employed by
him in the specimen form at (Appendix-VII)
ii) The card shall be valid for each wage period.
iii) The contractor shall mark the attendance of each workman on the card twice each day, once at the commencement of the day and again after the rest interval, before he actually starts work.
iv) The card shall remain in possession of the worker during the wage period under reference.
v) The contractor shall complete the wage slip portion on the reverse of the card at least a day prior

to the disbursement of wages in respect of the wage period under reference.

vi) The contractor shall obtain the signature or thumb impression of the worker on the wage slip at
the time of disbursement of wages and retain the card with himself.

9. EMPLOYMENT CARD

The contractor shall issue an Employment Card in Form XIV of the CL (R&A) Central Rules 1971
to each worker within three days of the employment of the worker (Appendix-VIII).

10. SERVICE CERTIFICATE

On termination of employment for any reason whatsoever the contractor shall issue to the workman
whose services have been terminated, a Service certificate in Form XV of the CL (R&A) Central Rules 1971 (Appendix-IX)

11. PRESERVATION OF LABOUR RECORDS

All records required to be maintained under Regulations Nos. 6 & 7 shall be preserved in original for a period of three years from the date of last entries made in them and shall be made available for inspection by the Engineer-in-Charge or Labour Officer or any other officers authorised by the Ministry of Urban Development in this behalf.

12. POWER OF LABOUR OFFICER TO MAKE INVESTIGATIONS OR ENQUIRY

The Labour Officer or any person authorised by Central Government on their behalf shall have power to make enquires with a view to ascertaining and enforcing due and proper observance of Fair Wage Clauses and the Provisions of these Regulations. He shall investigate into any complaint regarding the default made by the contractor or subcontractor in regard to such provision.

13. REPORT OF LABOUR OFFICER

The Labour Officer or other persons authorised as aforesaid shall submit a report of result of his investigation or enquiry to the Executive Engineer concerned indicating the extent, if any, to which the default has been committed with a note that necessary deductions from the contractor's bill be made and the wages and other dues be paid to the labourers concerned. In case an appeal is made by the contractor under Clause 13 of these regulations, actual payment to labourers will be made by the Executive Engineer after the Chief Engineer has given his decision on such appeal.

i) The Executive Engineer shall arrange payments to the labour concerned within 45 days from the
receipt of the report form the Labour Officer or the Chief Engineer as the case may be.

14. APPEAL AGAINST THE DECISION OF LABOUR OFFICER

Any person aggrieved by the decision and recommendations of the Labour Officer or other person so authorised may appeal against such decision to the Chief Engineer concerned within 30 days from the date of decision, forwarding simultaneously a copy of his appeal to the Executive Engineer concerned but subject to such appeal, the decision of the officer shall be final and binding upon the contractor.

15. PROHIBITION REGARDING REPRESENTATION THROUGH LAWYER

i) A workman shall be entitled to be represented in any investigation or enquiry under these regulations by:-

a) An officer of a registered trade union of which he is a member.

b) An officer of a federation of trade unions to which the trade union referred to in clause (a) is
affiliated.

c) Where the employer is not a member of any registered trade union, by an officer of a registered trade union, connected with the industry in which the worker is employed or by any other workman employed in the industry in which the worker is employed.

ii) An employer shall be entitled to be represented in any investigation or enquiry under these regulations by :-

a) An officer of an association of employers of which he is a member.

b) An officer of a federation of associations of employers to which association referred to in clause (a) is affiliated.

c) Where the employers is not a member of any association of employers, by an officer of association of employer connected with the industry in which the employer is engaged or by any other employer, engaged in the industry in which the employer is engaged.

(iii) No party shall be entitled to be represented by a legal practitioner in any investigation or enquiry under these regulations.

16. INSPECTION OF BOOKS AND SLIPS

The contractor shall allow inspection of all the prescribed labour records to any of his workers or to his agent at a convenient time and place after due notice is received or to the Labour Officer or any other person, authorised by the Central Government on his behalf.

17. SUBMISSIONS OF RETURNS

The contractor shall submit periodical returns as may be specified from time to time.

18. AMENDMENTS

The Central Government may from time to time add to or amend the regulations and on any question as to the application/Interpretation or effect of those regulations the decision of the Chief Engineer concerned shall be final.

19. Reference documents for Appendices / formats mentioned under the head of 'Contractor's Labour Regulations'- http://cpwd.gov.in/Publication/GCC14.pdf page no 82 onwards of the document.

Form of Performance Security (Guarantee)
Bank Guarantee Bond

In consideration of the Director, IIM Indore(hereinafter called "The IIM Indore") having offered to accept the terms and conditions of the proposed agreement between……..and ……..…… (hereinafter called "the said Contractor(s)") for the work…… (hereinafter called "the said agreement") having agreed to production of an irrevocable Bank Guarantee for Rs. ……. (Rupees …… only) as a security/guarantee from the contractor(s) for compliance of his obligations in accordance with the terms and conditions in the said agreement.

1. We, ……. (hereinafter referred to as "the Bank") hereby undertake to pay to the IIM Indore an amount not exceeding Rs. …….. (Rupees…….. Only) on demand by the IIM Indore.

2. We, ……..(indicate the name of the Bank) do hereby undertake to pay the amounts due and payable under this guarantee without any demure, merely on a demand from the IIM Indore stating that the amount claimed as required to meet the recoveries due or likely to be due from the said contractor(s). Any such demand made on the bank shall be conclusive as regards the amount due and payable by the bank under this Guarantee. However, our liability under this guarantee shall be restricted to an amount not exceeding Rs. …….. (Rupees ……..only)

3. We, the said bank further undertake to pay the IIM Indore any money so demanded notwithstanding any dispute or disputes raised by the contractor(s) in any suit or proceeding pending before any court or Tribunal relating thereto, our liability under this present being absolute and unequivocal. The payment so made by us under this bond shall be a valid discharge of our liability for payment thereunder and the Contractor(s) shall have no claim against us for making such payment.

4. We, ……. (indicate the name of the Bank) further agree that the guarantee herein contained shall remain in full force and effect during the period that would be taken for the performance of the said agreement and that it shall continue to be enforceable till all the dues of the IIM Indore under or by virtue of the said agreement have been fully paid and its claims satisfied or discharged or till Engineer-in- Charge on behalf of the
IIM Indore certified that the terms and conditions of the said agreement have been fully and properly carried out by the said Contractor(s) and accordingly discharges this guarantee.

5. We, ……. (indicate the name of the Bank) further agree with the IIM Indore that the IIM Indore shall have the fullest liberty without our consent and without affecting in any manner our obligation hereunder to vary any of the terms and conditions of the said agreement or to extend time of performance by the said Contractor(s) from time to time or to postpone for any time or from time to time any of the powers exercisable by the IIM Indore against the said contractor(s) and to forbear or enforce any of the terms and conditions relating to the said agreement and we shall not be relieved from our liability by reason of any such variation, or extension being granted to the said Contractor(s) or for any forbearance, act of omission on the part of the IIM Indore or any indulgence by the IIM Indore to the

said Contractor(s) or by any such matter or thing whatsoever which under the law relating to sureties would, but for this provision, have effect of so relieving us.

6. This guarantee will not be discharged due to the change in the constitution of the Bank or the Contractor(s).

7. We, ……. (indicate the name of the Bank) lastly undertake not to revoke this guarantee except with the previous consent of the IIM Indore in writing.

8. This guarantee shall be valid up to ……unless extended on demand by the IIM Indore. Notwithstanding anything mentioned above, our liability against this guarantee is restricted to Rs. …… (Rupees ……..) and unless a claim in writing is lodged with us within six months of the date of expiry or the extended date of expiry of this guarantee all our liabilities under this guarantee shall stand discharged. Dated the ……..day of ……for…….(indicate the name of the Bank).

PROFORMA OF SCHEDULES

SCHEDULE 'A'

Schedule of quantities (as per Volume-III).

SCHEDULE 'B'

Schedule of materials to be issued to the contractor. – Deleted.

SCHEDULE 'C'

Tools and plants to be hired to the contractor – Deleted.

SCHEDULE 'D'

Extra schedule for specific requirements/document for the work, if any. - To be intimated later if required.

SCHEDULE 'E'

Reference to General Conditions of contract laid down in the tender document.
Name of Work: "Construction, Supply & Installation of Furniture/Fixture in Faculty Residence, Visiting Faculty Residence & IPM Hostels at IIM Indore"

Estimated cost of work: Rs. 220.358 Lacs

(i) Earnest money: Rs. 4.41 Lacs. (to be returned after receiving performance guarantee)
(ii) Performance Guarantee : 5% of tendered value.
(iii) Security Deposit : 2.5% of tendered value.

or

2.5% of tendered value plus 50% of PG for contracts involving maintenance of the building and services/ other work after construction of same building and services/ other work.

SCHEDULE 'F'

GENERAL RULES : & DIRECTIONS	Officer inviting tender- The Chief Engineer, IIM Indore on behalf of the Director IIM Indore.
Maximum percentage for quantity of items of work to be executed beyond which rates are to be determined in accordance with Clauses 12.2 & 12.3.	See below

Definitions:

2(v)	Engineer-in-Charge	Executive Engineer (Civil)
2(viii)	Accepting Authority	Chief Engineer/Director
2(x)	Percentage on cost of materials and labour to cover all overheads and profits.	15%

2(xi)	Standard Schedule of Rates	CPWD DSR 2014
2(xii)	Department	Project Department, IIM Indore.
9(ii)	Standard CPWD contract Form GCC 2014, CPWD Form 7/ 8 as modified & corrected.	Upto date.

Clause 1

(i) Time allowed for submission of Performance Guarantee from the date of issue of letter of acceptance — 10 Days

(ii) Maximum allowable extension with late fee @ 0.1% per day of Performance Guarantee amount beyond the period provided in (i) above ….... — 15 days

Clause 2

Authority for fixing compensation under clause 2. — Chief Engineer/ Director, IIM Indore

Clause 2A

Whether Clause 2A shall be applicable — Yes

Clause 5

Number of days from the date of issue of letter of acceptance for reckoning date of start — 07 Days or date of work order whichever is earlier.

Mile stone(s) as per table given below:-

Sl. No.	Description of Milestone (Physical)	Time Allowed in days (from date of reckoning start)	Amount to be with-held in case of non achievement of milestone
1	Construction ,Supply & Installation of Modular Furniture for 20no. Flats of Faculty residence at IIM Indore	30 Days	Rs. 5,00,000/-
2	Construction ,Supply & Installation of Modular Furniture for 10no. flats of Faculty & 10no.-01BHK Flats for Visiting Faculty residence at IIM Indore	45 Days	Rs. 5,00,000/-
3	Construction ,Supply & Installation of Modular Furniture for 02 no.-01BHK & 06no.-02BHK Visiting Faculty residence at IIM Indore and Supply & Installation of Mirror as well as hook patti	60 Days	Rs. 5,00,000/-

Time allowed for execution of work. **60 Days.**

Authority to decide:

(i) Extension of time – Chief Engineer/Director, IIM Indore
(ii) Rescheduling of mile stones- Chief Engineer, IIM Indore
(iii) Shifting of date of start in case of delay in handing over of site- Chief Engineer, IIM Indore

Clause 6, 6A

Clause applicable - (6 or 6A) 6 A

Clause 7

Gross work to be done together with net payment /adjustment of advances for material collected, if any, since the last such payment for being eligible to interim payment Rs. 50,00,000/-

Clause 10A

List of testing equipment to be provided by the contractor at site lab.- Deleted.

Clause 10B(ii)

Whether Clause 10 B (ii) shall be applicable Yes

Clause 10CA – Deleted.

Clause 10CC – Deleted.

Clause 11

Specifications to be followed for execution of work Relevant BIS code, CPWD Specifications with up-to-date correction slips.

Clause 12

Type of work Construction ,Supply & Installation of Modular Furniture

12.2 & 12.3 Deviation Limit beyond which clauses 12.2 & 12.3 shall apply for work 50%

Clause 16

Competent Authority for deciding reduced rates. Director IIM Indore.

Clause 25

Constitution of Dispute Redressal Committee (DRC) – Construction Committee of IIM Indore.

Clause 36 (i)

Requirement of Technical Representative(s) and recovery Rate

SI no	Minimum Qualification of Technical Representative	Discipline	Designation (Principal Technical /Technical representative)	Minimum Experience	Number	Rate at which recovery shall be made from the contractor in the event of not fulfilling provision of clause 36(i)	
						Figures	Words
1	Graduate Engineer /Diploma Engineer	Civil	Site Engineer	Graduate Engineer with minimum 2 years/ Diploma Engineer with 5 year.	1	Rs. 15,000/-	Rupees fifteen thousand only
2.	Graduate Engineer	Civil	Project Planning/Site/ Billing engineer	Graduate Engineer with minimum 5 years	1	Rs. 25,000/-	Rupees Twenty-five thousand only

Assistant Engineers retired from Government services that are holding Diploma will be treated at par with Graduate Engineers.

Diploma holder with minimum 10 year relevant experience with a reputed construction co. can be treated at par with Graduate Engineers for the purpose of such deployment subject to the condition that such diploma holders should not exceed 50% of requirement of degree engineers.

AGREEMENT

THIS AGREEMENT made at Indore on the _____ day of _____ 2014 between Indian Institute of Management Indore Rau- Pithampur Road, Indore (hereinafter called "The IIM INDORE" which expression shall, unless repugnant to the context or meaning thereof, include its administrators, successors and assigns) of the one part AND_____ _____ (herein after called "The Contractor" which expression shall, unless repugnant to the context or meaning thereof, include its successors and permitted assigns) of the other part.

WHEREAS

The IIM INDORE is desirous of carrying out the work of

_____

_____

_____ **at IIM Indore**

The Works are to be executed as per the scope of work, technical specifications, drawings etc. as is mentioned in the tender document.

The Contractor has agreed to execute the said works subject to the provisions hereinafter contained and subject also to General Conditions of Contract, Special conditions of contract, Safety Code, Model Rules for the protection of health and other arrangements for workers, Specifications, Preambles and Schedule of Quantities and erection & furnishing schedule (all of which are hereinafter collectively referred to as the 'said tender conditions') and strictly in accordance with the Scope of work annexed hereto at or for the respective rates set out in the Schedule of Quantities amounting to the sum as there under arrived at or such other sums as shall become payable there under (hereinafter referred to as the said tendered amount).

NOW IT IS HEREBY AGREED AS FOLLOWS: -

1. In consideration of the said tendered amount to be paid by The IIM INDORE to the Contractor at the time and in the manner set forth in the said tender conditions and in accordance with the Schedule of Payments to execute and complete the work shown upon the said Drawings strictly in accordance with the specifications and Schedule of Quantities.

2. The said tender conditions, scope of work and the annexure hereto shall be read and considered as forming part of this contract and the parties hereto shall respectfully abide by to the said conditions and perform the agreement on their part respectively contained in the said conditions.

3. The approved drawings if any, notice inviting tenders technical specification etc. shall also form the basis of this contract.

4. This contract is neither a Lump sum Contract, nor a piece work contract, but is a contract on item rate basis to be carried out and to be paid for according to the Schedule of Payments at the rates contained in the Schedule of Quantities.

5. The contract herein contained shall comprise not only the works mentioned above but all subsidiary works connected therewith within the same site as may be ordered to be done from time to time by the said Engineer In charge for the time being, even if such work may not be shown on the said Drawings or described in the said Specifications and Schedule of Quantities.

6. The IIM INDORE reserves to themselves the right of altering the drawings and the nature of the work by adding to or omitting from the scope of work any item of work or portions of the same without prejudice to this contract.

7. Time shall be considered as the essence of this contract and the Contractor hereby agrees to commence the work immediately from the date of work order and shall complete the entire work within the specified period.

8. All payments by the IIM INDORE under this contract shall be made only at Indore.

9. All disputes arising out of or in any way connected with this contract shall be deemed to have arisen at Indore and courts in Indore only shall have jurisdiction to determine the same.

10. That the contract and several parts of this contract have been read by the contractor and fully understood by him. The contractor shall not be entitled for payment beyond tendered quantities unless ordered specifically by written instructions of authorized representative of IIM Indore.

11. This contract shall be signed in duplicate, the original whereof shall be kept in the custody of the IIM INDORE, and the duplicate with the Contractor.

IN WITNESS WHEREOF the IIM INDORE has set his hands hereunto and two duplicates hereof through his duly authorized official and the Contractor has caused these presents and two duplicates hereof under his common seal by his duly authorized representative at the place and on the date month and year first herein above written.

SIGNED, SEALED AND DELIVERED by IIM INDORE, by the hand of

Signature:
Name:
Designation:

IN THE PRESENCE OF

(1) Signature:
Name:
Address:

(2) Signature:
Name:
Address:

SIGNED, SEALED AND DELIVERED BY the Contractor M/s._____
_____.

Signature:
Name:
Designation:

IN THE PRESENCE OF

(1) Signature:
Name:
Address:

(2) Signature:
Name:
Address:

VOLUME-II

TENDER DRAWINGS/SPECIFICATIONS

Marine Plywood

1 Marine plywood shall be generally conforming to IS 710. Selection of timber species for manufacture of plywood shall be as prescribed in IS 710 and as far as possible a single species of timber shall be used.

2 ***Adhesive :*** The adhesive used for bonding the veneer shall be of the hot press synthetic resin, phenol formaldehyde type (BWP) and shall conform to IS 848. Extender shall not be added to the adhesive by the plywood manufactures. Fillers, if used, shall not exceed 10 percent by mass of solid content of the glue.

3 ***Dimensions***

3.1 The dimensions of plywood boards shall be as stated in para 9.2.10.5.
3.2 The thickness of any board shall not exceed the number of pieces multiplied by 2.5 mm. The two face veneers in finished board shall be of the same nominal thickness.

4 ***Tolerances :*** The following tolerances in the nominal size of finished boards shall be permitted.

Dimension	*Nominal Size*	*Tolerance*
Length	Upto 120 cm.	+ 3 mm
	Above 120 cm.	+ 6 mm
Width	Upto 90 cm.	+ 3 mm
	Above 90 cm	+ 6 mm
Thickness	Upto 4 mm	$\pm$ 10 per cent
	Above 4 mm	$\pm$ 5 per cent

5 ***Sampling :*** The method of drawing representative samples and criteria for conformity shall be as prescribed in IS 7638.

6 ***Tests :*** Test pieces cut from each of board as specified at para 9.2.11.5 shall be subjected to following tests.
(a) Moisture content
(b) Glue adhesive in dry state
(c) Water resistance test.
(d) Tensile strength
(e) Mycological test
(f) Retension of preservative.
These tests shall be carried out as specified in IS 710.

7 Marking : Each plywood board shall be legibly and indelibly marked or stamped with following particulars along with such other marks as the purchaser may stipulate at the time of placing order.
(a) Manufacturer's name, initials or recognized trade mark, if any.
(b) Year of manufacturing.
(c) Abreviation indicating the species of timber used in each ply as indicated in col. 3 of Table – 1 and 2 of IS 710.
(d) Batch number

8 *BIS Certification Marking :* The plywood board may also be marked with the standard mark, governed by the BIS Act,1986.

9 *Tender Sample, Inspection and Acceptance:* Where samples are required to be tendered, three samples each not less than 90 x 60 mm in size shall be submitted by the supplier, and these samples, if the tender is accepted shall constitute the standard as regards the type of timber, quality and finish.

Laminate

Should be of FR+ Fire Retardant Laminates or equivalent .

Description:

Halogen Free FR+ Fire Retardant Laminates that are safe, harmless, and sturdy; and should come in exquisite designs and colours. Manufactured by treating papers with specially developed fire retardant chemicals. FR+ Fire Retardant Laminates are resistant to flame. The fire retardant chemical used is halogen free hence it significantly reduces the risk of toxic smoke.

Class-I Fire Rating:

FR+ Fire Retardant Laminates should be approved by Warrington fire laboratory, UK, as per BS-476 standard and is also tested as per ASTM E-84 Standard

The product passes Class-I Fire Rating & only fire retardant adhesive and substrates to be used. Class-I Fire Retardant Laminates do not allow fire to spread further, once the source is removed and extinguishes itself within a stipulated time Significantly reduces the risk of toxic smoke

- FR+ Fire Retardant Laminate must be bonded with Plywood with appropriate fire rating. Fire Rated glue is only recommended.

Optimum conditions for use:

High Pressure Laminates should be properly conditioned to the ambient conditions of the surroundings before they are used. For eg., High Pressure Decorative Laminates and the substrate need at least 48 hours to get acclimatised. Provision should be made for the circulation of air around the components.

Recommended conditioning temperature is about 24°C. Laminates should be conditioned at 45% to 55% relative humidity.

Tooling:

Sawing: To avoid chipping, it is important that the saw blade teeth cut into the decorative face.

Circular sawing:

Always provide support to the material near the point of blade contact to avoid vibration that causes chipping. Blades with trapezoid tooth configuration and both tungsten carbide and diamond tip blades have proved to be excellent tools for sawing high pressure decorative laminates.

Routing:

Routing may be done with electric or air powered carbide tip routers. Router speed should be maintained at 16000 to 22000 rpm. It is important to use a router having adequate horsepower to maintain cutting speeds (based on the type and amount of material to be cut). For special edge trimming, very high speed routers should be available which produce smooth-edge chip-free work. Sharpness of the router cutters should be maintained.

Edge-finishing:
Belt sanders may be used to flush the self-edge before the laminate top is applied. However, care should be taken to direct the sanding operation away from or parallel to the decorative surface.

Protective-film:
The protective film where applied should be removed as soon as the application is complete. If the film is left in place after fabrication, exposure to strong lights for a period may cause a pale residue and make it difficult to remove the protective film.

Proper bonding recommendations:

The surfaces should be clean, dry, and free of oils or other contaminants, such as dust, synthetic particles, and so forth. The adhesive film should have full contact with the surface to which it is applied in order to give maximum adhesion

The adhesive should always be stirred or agitated before use. Sufficient amount of adhesive should be applied on either or both the surfaces to be bonded. When ready for bonding, the spread film of most contact adhesives will exhibit a uniform semi-gloss appearance over the entire surface of the materials to be bonded. Marked variation in appearance will generally indicate an improper or non-uniform adhesive spread. The substrate can generally be seen more readily through those areas where insufficient adhesive has been applied. If this occurs, re-coating the surfaces should achieve a uniform coating. Double coating the edges with adhesive is advisable because of the higher porosity of the substrate edge

Sufficient bonding pressure to ensure intimate contact is necessary for an adequate bond. Sufficient pressure should be applied over the entire area using as much pressure as possible without damaging the assembly. Pinch rollers (rotary press) and heavy weighted rollers are ideal for such purposes. Hand rolling should be done from the center to the edges to ensure the removal of all air bubbles. The edges should be rolled twice

Care should be taken to follow the manufacturer's recommendations concerning the allowable tack range of the adhesive. If assembly is made before the adhesive is dry

or after the allowable open time is exceeded, the bond may not have satisfactory results

Unless otherwise indicated by the manufacturer, the temperature of the gluing area and all materials should be maintained around 21°C (70°F) or above.Experience has shown that when the relative humidity is above 80% at temperatures of 21°C (70°F) or lower, moisture may condense on the surface during drying (known as blushing) and this will prevent an acceptable bond. Hot spray or forced air drying may be used to help prevent this condition

A gap of minimum 2 mm should be maintained between two laminates while pasting side by side

Test Result:

The Test to be conducted in accordance with ASTM International Fire Test response standard referred to as Steinter Tunnel Test. ASTM E – 84 is equivalent of NFPA No 255, and UL No – 723.

Test	Test method as per Standard	Classification	Standard result
Flame spread Index	ASTM : E-84	Class – 1	Class A < 25
Smoke developed Index	ASTM : E-84	Class – 1	Class A < 450

NOTE: All other properties as per EN – 438 Standard

Warranty: under normal use & service, the material & workmanship of the products shall confirm to the standards set forth on the applicable technical data sheet for a period of twelve (12) months from the date of supply/installation subjected it shall not apply to defects or damage arising from any of the following: Accidents, abuse or misuse, exposure to extreme temperature, improper maintenance.

Pro-Lift Bed Fittings

- Ideal for storage under bed.
- Special gas spring available in three loads.
- 30° opening angle allows easy access.
- Easy to lift (with the weight of top board) with minimum force.
- Easy access as the gas lift keeps the bed top stay.
- Long brackets provided for better support to the bed platform.
- Min. wt. –7.92 kg. Per set

Regular

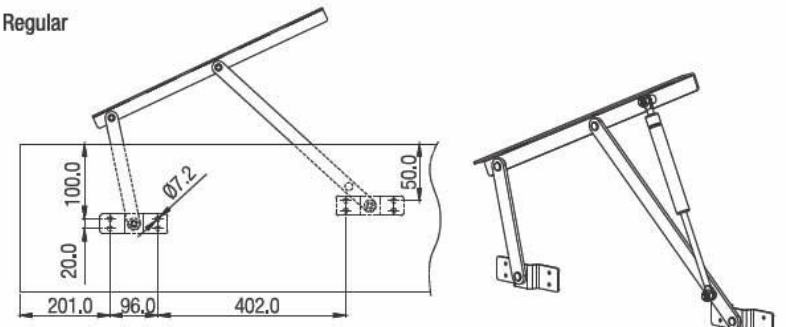

Fig.1

Extended Arm

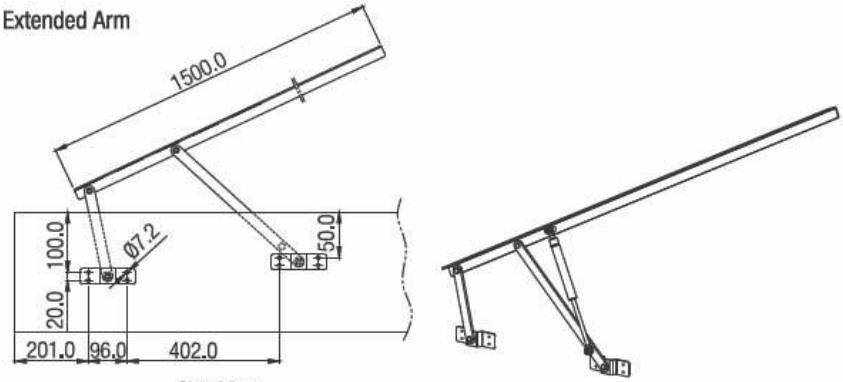

Fig.1

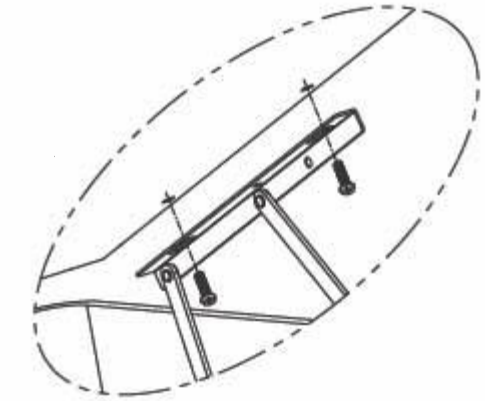

Fig.2

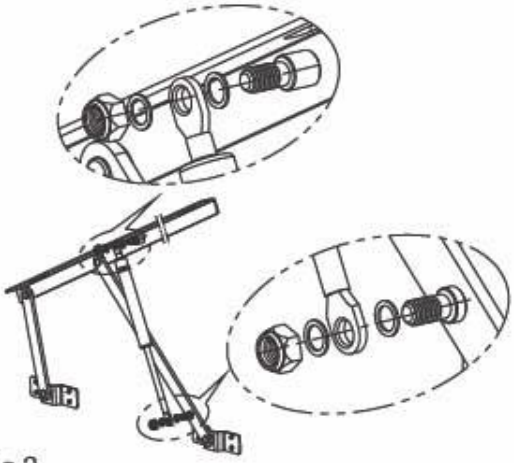

Fig.3

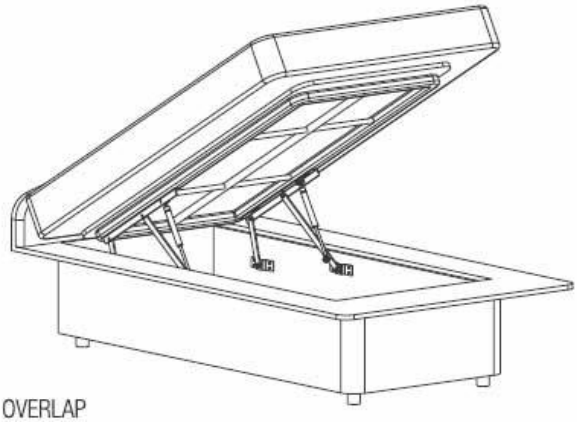

OVERLAP

Sleek Telescopic Drawer Slide

- Manufactured out of SS 304
- Precision ball bearing.
- Full Extension of drawer.
- Load Capacity 45 Kgs.
- Direct Fitting from front
- Removable drawer with latch
- System 32 installation
- Min. wt. Of 450mm slide-1.3 kg. Per set

LIST OF APPROVED MAKE FOR MATERIALS

Sl. No.	Material	Approved Make
1	PLY	Green Ply, Century Ply, Euro, Marin Ply
2	Laminate	Green Ply, Century Ply, Euro, Merino
3	Fitting / Accessories	DORMA, HAFELE,EBCO, Godrej, Hettich
4	Glass	GSC, Pilkington, Gold Plus,S. Gobain, Aasahi

NOTE: Items not included in above list should be got approved by engineer-in-charge.

VOLUME-III
FINANCIAL BID
For

Construction, Supply & Installation of Furniture/Fixture in Faculty Residence, Visiting Faculty Residence & IPM Hostels at IIM Indore.

Sl. No.	Description of items	Unit	Quantity	Rate	Amount
1	Providing and fixing in position Dressing unit of size 1200X450X2000 MM as per the approved drawing made up of 18 mm thick Marine Plywood conforming to IS:710 both side laminated top ,bottom, side, shelf ,vertical , skirting , drawer facia ,drawer back , drawer side , back panel etc.. with 18 mm thick door and 9 mm thick both side laminated drawer bottom including necessary approved hinge, telescopic slide ,multipurpose lock , hanger rod ,96 mm handle , kd/minifix fitting, edges to be sealed with PVC edge bending tape 2.00 mm thick of approved brand and 5 mm full height mirror glass fixture and finishing etc.complete job. as per approved shade and colour and as per Architecture drawing and Engineer in Charge. .	No.	48		
2	Providing and fixing in position WARDROBE unit of size 1600X600X2100 MM as per the approved drawing made up of 18 mm thick Marine Plywood conforming to IS:710 both side laminated top ,bottom, side, shelf ,vertical , skirting , drawer facia ,drawer back , drawer side etc.. with 18 mm thick door and 9 mm thick both side laminated drawer bottom and back panel including necessary approved hinge, telescopic slide ,multipurpose lock ,hanger rod of 25mm dia 16 gauge nickel plated MS Pipe ,2nos. tower bolt of barrel type having size 150 x 10mm, 4 nos. magnetic catcher triple strip vertical type of approved quality, 128 mm handle , kd/minifix fitting, edges to be sealed with PVC edge bending tape 2.00 mm thick of approved brand fixture and finishing etc.. complete job. as per approved shade and colour and as per Architecture drawing and Engineer in Charge. .	No.	114		
3	Providing and fixing in position OVER HEAD unit on the wardrobe of size 1600X600X621 MM as per the approved drawing made up of 18 mm thick Marine Plywood conforming to IS:710 both side laminated top ,bottom, side,door and 9 mm thick both side laminated back panel including necessary approved hinge , 96 mm handle , kd/minifix fitting, edges to be sealed with PVC edge bending tape 2.00 mm thick of approved brand fixture and finishing etc.. complete job. as per approved shade and colour and as per Architecture drawing and Engineer in Charge. .	No.	114		
4	Providing and fixing in position TV unit of size 1500X530X2100 MM as per the approved drawing made up of 18 mm thick Marine Plywood conforming to IS:710 (hallow type) both side laminated top ,bottom, side and 18 mm thick complate drawer	No.	48		

	unit and wall mounting back panel with shelf and 9 mm thick both side laminated drawer bottom and drawer unit back including necessary approved make telescopic slide , 96 mm handle , kd/minifix fitting, edges to be sealed with PVC edge bending tape 2.00 mm thick of approved brand fixture and finishing etc.. complete job. as per approved shade and colour and as per Architecture drawing and Engineer in Charge. .				
5	Providing and fixing in position Bed unit of size 1870X2150X900 MM along with under bed box unit of size 1830 X 1950 as per the approved drawing made up of 18 mm thick Marine Plywood conforming to IS:710 both side laminated all head board panel , foot board ,side panel , vertical panel with 18 mm thick cushion coverd door and 12 mm thick bottom panel and top panel including necessary approved hinge, hydraulic lifter suitable for this size of bed ,kd/minifix fitting, edges to be sealed with PVC edge bending tape 2.00 mm thick of approved brand fixture and finishing etc.. complete job. as per approved shade and colour and as per Architecture drawing and Engineer in Charge. .	No.	24		
6	Providing and fixing in position Bed Side unit of size 450X450X450 MM as per the approved drawing made up of 18 mm thick Marine Plywood conforming to IS:710 both side laminated top ,bottom, side ,skirting , drawer facia ,drawer back , drawer side and 9 mm thick both side laminated drawer bottom and back panel including necessary telescopic slide , 96 mm handle , kd/minifix fitting, edges to be sealed with PVC edge bending tape 2.00 mm thick of approved brand fixture and finishing etc.. complete job. as per approved shade and colour and as per Architecture drawing and Engineer in Charge. .	No.	48		
7	Providing and fixing in position SHOE RACK unit of size 600X400X900 MM as per the approved drawing made up of 18 mm thick Marine Plywood conforming to IS:710 both side laminated top ,bottom, side ,skirting ,door and 9 mm thick both side laminated back panel including necessary approved hinge , 96 mm handle , kd/minifix fitting, edges to be sealed with PVC edge bending tape 2.00 mm thick of approved brand fixture and finishing etc.. complete job. as per approved shade and colour and as per Architecture drawing and Engineer in Charge. .	No.	48		
8	Providing and fixing in position Dining Table unit of size 1500X900X760 MM as per the approved drawing made up of Stainless Steel 202 grade 16 gauge pipe frame of sizes mentioned in the drawing & having 2mm thick 16 gauge base plate, black toughened glass 12mm thick Top Size 1500 x 900 MM, Chrome finish,materials conforming to relevant IS Standard including necessary fittings of approved brand fixture and finishing etc.complete job as per approved shade and colour and as per Architecture drawing and Engineer in Charge.	No.	18		
9	Providing and fixing in position Dining table Chair without arms ergonomicaly designed for complete lumber support for Dining Table unit of size 450 X 533 X 1050 MM as per the approved drawing made up of Stainless Steel 202 grade 16 gauge square pipe frame of size 25 X 25 mm , seat & back assembly made up of 14mm hot pressed plywood die pressed, foam upholstery	No.	108		

	25mm thick for seat with density 40kg/m3 and 25mm thick for back with density 32kg/m3 covered with 1mm thick Leatherrite tapestry, Chrome finish,materials conforming to relevant IS Standard including necessary fittings of approved brand fixture and finishing etc. complete job as per approved shade and colour and as per Architecture drawing and Engineer in Charge.				
10	Providing and fixing in position One Seater Sofa unit of size 865 (L) x 785 (D) x 730 (H) mm as per the approved drawing made up of Stainless Steel 202 grade 16 gauge 25.4 mm round pipe frame.Main frame made up of 15 x 30 x 1.6mm Stainless Steel 202 grade pipe and PVC Shoe is used in the bottom of the frame. seat & back assembly made up of 12mm commercial plywood having basic structure made up of wooden (marandi wood 100 x 100 mm battens), foam upholstery 150mm thick for seat with density 40kg/m3 and 70mm thick for back/side with density 32kg/m3 covered with 1mm thick Leatherrite tapestry, Chrome finish,materials conforming to relevant IS Standard including necessary fittings of approved brand fixture and finishing etc.complete job as per approved shade and colour and as per Architecture drawing and Engineer in Charge.	No.	18		
11	Providing and fixing in position two Seater Sofa unit of size 1370 (L) x 785 (D) x 730 (H) mm as per the approved drawing made up of Stainless Steel 202 grade 16 gauge 25.4 mm round pipe frame.Main frame made up of 15 x 30 x 1.6mm Stainless Steel 202 grade pipe and PVC Shoe is used in the bottom of the frame. seat & back assembly made up of 12mm commercial plywood having basic structure made up of wooden (marandi wood 100 x 100 mm battens), foam upholstery 150mm thick for seat with density 40kg/m3 and 70mm thick for back/side with density 32kg/m3 covered with 1mm thick Leatherrite tapestry, Chrome finish,materials conforming to relevant IS Standard including necessary fittings of approved brand fixture and finishing etc.complete job as per approved shade and colour and as per Architecture drawing and Engineer in Charge.	No.	18		
12	Providing and fixing in position three Seater Sofa unit of size 1880 (L) x 785 (D) x 730 (H) mm as per the approved drawing made up of Stainless Steel 202 grade 16 gauge 25.4 mm round pipe frame.Main frame made up of 15 x 30 x 1.6mm Stainless Steel 202 grade pipe and PVC Shoe is used in the bottom of the frame. seat & back assembly made up of 12mm commercial plywood having basic structure made up of wooden (marandi wood 100 x 100 mm battens), foam upholstery 150mm thick for seat with density 40kg/m3 and 70mm thick for back/side with density 32kg/m3 covered with 1mm thick Leatherrite tapestry, Chrome finish,materials conforming to relevant IS Standard including necessary fittings of approved brand fixture and finishing etc. complete job as per approved shade and colour and as per Architecture drawing and Engineer in Charge.	No.	18		
13	Providing and fixing in position Centre Table unit of size 1200X600X450 MM as per the approved drawing made up of Stainless Steel 202 grade 16 gauge pipe frame, toughened glass 12mm thick Top Size 1200 x 600 MM and bottom Size 916 x 468	No.	18		

	MM , Chrome finish,materials conforming to relevant IS Standard including necessary fittings of approved brand fixture and finishing etc.complete job as per approved shade and colour and as per Architecture drawing and Engineer in Charge.				
14	Providing and fixing in position 1050x 325 mm beveled edge mirror of 6mm thick superior glass (of approved quality) complete with plastic moulded frame of approved make and shade fixed to cleats with C.P. brass /SS screws , washers etc. complete job as per Engineer in Charge.	No.	686		
15	Providing and fixing in position minimum 360mm long Chromium Plated Brass hook Patti (of approved quality with min. wt. of 600gms.) having 6no. of hooks not less than 50mm length of approved make fixed with SS screws etc. complete job as per Engineer in Charge.	No.	900		
TOTAL (In Rs.)					

Amount in words:

Undertaking:

I/We agree to undertake above work at our quoted amount of Rs._____/- inclusive of all charges i.e Supply, Installation, testing, commissioning, transportation, labour, levies, applicable taxes, VAT etc.

Name
Signature & Seal